STANDARD MECHANICAL ABBREVIATIONS

AF	AIRFOIL	ID	INSIDE(DIAMETER/DIMENSION)
AFF	ABOVE FINISHED FLOOR	IE	INVERT ELEVATION
AHP	APPARATUS HOUSING PLENUM	IN	INCH(ES)
ALT	ALTERNATIVE	INSUL	INSULATION
AL	ALUMINUM	ISOL	ISOLAT(OR)(ION)
APD	AIR PRESSURE DROP	KE	KITCHEN EQUIPMENT
APPROX	APPROXIMATELY	KW	KILOWATT
ARCH	ARCHITECT(URAL)	KWH	KILOWATT HOUR
AUTO	AUTOMATIC	L	LENGTH
BDD	BACKDRAFT DAMPER	LAT	LEAVING AIR TEMP
BI	BACKWARD INCLINED	LB	POUND
BLDG	BUILDING	LDB	LEAVING DRY BULB
BSMT	BASEMENT	LF	LINEAR FEET
BTU	BRITISH THERMAL UNIT	LFT	LEAVING FLUID TEMPERATURE
BTUH	BRITISH THERMAL UNITS PER HOUR	LVG	LEAVING
CFH	CUBIC FEET PER HOUR	LWB	LEAVING WET BULB
CFM	CUBIC FEET PER MINUTE	LWT	LEAVING WATER TEMPERATURE
CFS	CUBIC FEET PER SECOND	MAX	MAXIMUM
CLG	CEILING OR COOLING	MBH	THOUSAND BTU PER HOUR
CONC	CONCRETE	MECH	MECHANICAL
CONN	CONNECT(ION)	MFR	MANUFACTURER
CONT	CONTINUE(ED)(UATION)	MIN	MINIMUM
CL	CENTERLINE	MISC	MISCELLANEOUS
DDC	DIRECT DIGITAL CONTROL	MTD	MOUNTED
DEFL	DEFLECTION	NC	NORMALLY CLOSED
DN	DOWN	NIC	NOT IN CONTRACT
DP	DEW POINT	NO	NORMALLY OPEN
DWDI	DOUBLE WIDTH DOUBLE INLET	OAD	OUTSIDE AIR DAMPER
DWG	DRAWING	OC	ON CENTER DISTANCE
EA	EXHAUST AIR	OSA	OUTSIDE AIR
EAD	EXHAUST AIR DAMPER	PH	PHASE
EAT	ENTERING AIR TEMPERATURE	PP	POLYPROPYLENE
EDB	ENTERING DRY BULB	PSI	POUNDS PER SQUARE INCH
EFF	EFFICIENCY	PVC	POLYVINYL CHLORIDE
EFT	ENTERING FLUID TEMPERATURE	PVS	PVC COATED STEEL
ELEC	ELECTRIC(AL)	R (RAD)	RADIUS
ELEV	ELEVATION	RA	RETURN AIR
ENGR	ENGINEER	RAD	RETURN AIR DAMPER
EQ	EQUAL	REV	REVISION
EQUIP	EQUIPMENT	RH	RELATIVE HUMIDITY
ESP	EXTERNAL STATIC PRESSURE	RPM	REVOLUTIONS PER MINUTE
EWB	ENTERING WET BULB	SA	SUPPLY AIR
EWT	ENTERING WATER TEMPERATURE	SCFM	STANDARD CUBIC FEET PER MINUTE
EX	EXTRACTOR	SD	SMOKE DAMPER
EXH	EXHAUST	SECT	SECTION
EXIST	EXISTING	SENS	SENSIBLE
EXP	EXPANSION	SIM	SIMILAR
F	DEGREES FAHRENHEIT	SP	STATIC PRESSURE
FC	FORWARD CURVED	SPEC	SPECIFICATION
FIG	FIGURE	SQ	SQUARE
FILT	FILTER	SF	SQUARE FOOT(FEET)
FLEX	FLEXIBLE	SQ IN	SQUARE INCH(ES)
FPD	FLUID PRESSURE DROP	SS	STAINLESS STEEL
FPM	FEET PER MINUTE	STL	STEEL
FPS	FEET PER SECOND	STRUCT	STRUCTUR(E)(AL)
FT	FEET/FOOT	SWP	SINGLE WALL PLENUM
FU	FIXTURE UNIT	SWSI	SINGLE WIDTH SINGLE INLET
FUT	FUTURE	TEMP	TEMPERATURE
FV	FACE VELOCITY	TSP	TOTAL STATIC PRESSURE
GA	GAGE/GAUGE	TYP	TYPICAL
GAL	GALLON	V	VOLTS
GALV	GALVANIZED	VD	VOLUME DAMPER
GLY	GLYCOL	VEL	VELOCITY
GPH	GALLONS PER HOUR	VERT	VERTICAL
GPM	GALLONS PER MINUTE	VTR	VENT THROUGH ROOF
H	HEIGHT	W	WIDTH
HORIZ	HORIZONTAL	WG	WATER GAUGE
HP	HORSEPOWER	WPD	WATER PRESSURE DROP
HTG	HEATING	W/	WITH
		W/O	WITHOUT

CONTROL SYMBOLS

- DAMPER WITH OPERATOR
- 2-WAY CONTROL VALVE
- 3-WAY CONTROL VALVE
- DO — DIGITAL OUTPUT FROM DDC PANEL
- DI — DIGITAL INPUT TO DDC PANEL
- AO — ANALOG OUTPUT FROM DDC PANEL
- AI — ANALOG INPUT TO DDC PANEL
- DP — DIFFERENTIAL PRESSURE SWITCH
- ES — DAMPER END SWITCH
- TERMINAL UNIT (VAV OR CV)
- SMK — DUCT SMOKE DETECTOR
- WFM — WATER FLOW METER WITH ELECTRONIC TRANSMITTER
- PB — PUSH BUTTON SWITCH
- H — ELECTRONIC HUMIDITY TRANSMITTER
- T — ELECTRONIC TEMPERATURE SENSOR
- FS — FLOW SWITCH
- T — ELECTRONIC SENSOR WITH AVERAGING
- CO2 — CARBON DIOXIDE SENSOR
- SP — STATIC PRESSURE SENSOR
- CT — CURRENT TRANSFORMER

HVAC PIPING

D	D	DRAIN (CONDENSATE/INDIRECT)
CHF	CHF	CHEMICAL FEED
ICW	ICW	INDUSTRIAL COLD WATER (MAKE-UP)
CHWS	CHWS	CHILLED WATER SUPPLY
CHWR	CHWR	CHILLED WATER RETURN
HWS	HWS	HEATING WATER SUPPLY
HWR	HWR	HEATING WATER RETURN
HWRR	HWRR	HEATING WATER REVERSE RETURN

DUCT DETAILS (LOW VELOCITY)

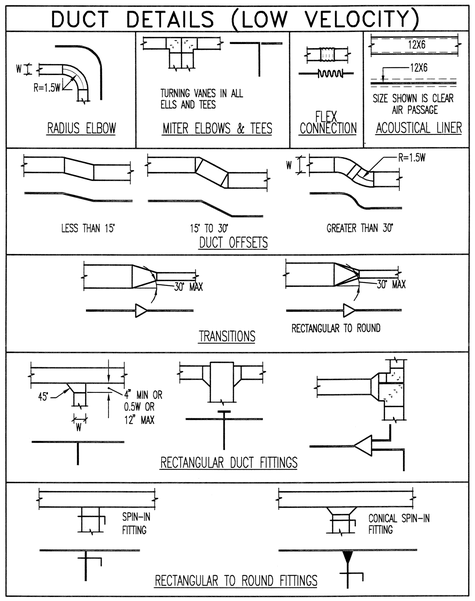

CEILING SUPPLY DIFFUSERS(C-1,C-2)

CFM RANGE	SQUARE NECK SIZE (BASED ON: TITUS PMC)	NOMINAL FACE SIZE C-1
0-200	6x6	24x24
201-270	8x8	24x24
271-345	10x10	24x24
346-500	12x12	24x24
501-780	15x15	24x24

NOTE: C-2 FACE SIZE EQUALS NECK SIZE PLUS 7-INCHES.

RETURN AIR GRILLES & REGISTERS(C-3)

CFM RANGE	NECK SIZE (BASED ON: TITUS PAR)	NOMINAL FACE SIZE
0-1500	22x22	24x24

RETURN AIR GRILLES & REGISTERS(C-4)

CFM RANGE	NECK SIZE (BASED ON: TITUS PAR)	NOMINAL FACE SIZE
0-340	10x10	12x12
341-680	14x14	16x16
681-1125	18x18	20x20
1126-1670	22x22	24x24

DUCT LEGEND

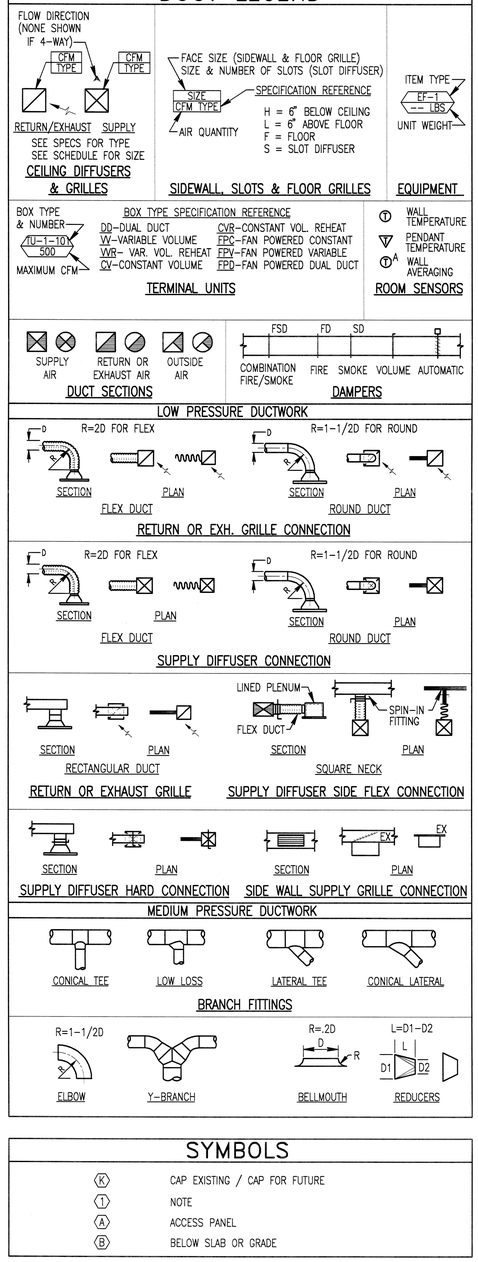

SYMBOLS

- K — CAP EXISTING / CAP FOR FUTURE
- 1 — NOTE
- A — ACCESS PANEL
- B — BELOW SLAB OR GRADE

MISC. VALVES & COCKS

- SHUT-OFF VALVE
- CHECK VALVE
- 2-WAY CONTROL VALVE
- 3-WAY CONTROL VALVE
- BALANCING VALVE
- FC — FLOW CONTROL VALVE
- SOLENOID VALVE
- PRESSURE REDUCING VALVE
- MAV AAV — AIR VENT (MANUAL/AUTOMATIC)
- RELIEF VALVE
- STRAINER
- STRAINER W/ BLOWDOWN
- DRAIN VALVE
- CV — HOSE BIBB
- HB — WALL HYDRANT
- WH
- PRESSURE GAUGE
- PRESSURE/TEMPERATURE TEST PLUG
- THERMOMETER
- T — TEMPERATURE TRANSMITTER
- S (SIZE) — SHOCK ARRESTOR
- V — VACUUM BREAKER
- WFM — WATER FLOW METER
- RPBP — REDUCED PRESSURE BACKFLOW PREVENTER
- BWV — BACKWATER VALVE
- OUTSIDE SCREW & YOKE
- M — WATER METER

MISC. FITTINGS & SYMBOLS

- DIRECTION OF FLOW
- DIRECTION OF SLOPE
- PIPE SLEEVE
- REDUCER
- ANCHOR
- ELBOW (90°)
- ELBOW (45°)
- TEE
- CROSS
- JOINT OR COUPLING POINT
- UNION
- FLANGED CONNECTION
- CAP
- PLUG OR BLIND FLANGE
- RISER
- ELBOW UP
- ELBOW DOWN
- TEE UP
- TEE DOWN
- FLEXIBLE CONNECTION
- BALL JOINT
- MC — MECHANICAL COUPLING

LEGENDS, SYMBOLS AND ABBREVIATIONS – MECHANICAL

PCC ROCK CREEK CAMPUS
NEW BUILDING

PORTLAND COMMUNITY COLLEGE
ROCK CREEK CAMPUS
17705 NW Springville Road
PORTLAND, OREGON 97229

THOMAS HACKER ARCHITECTS INC
733 SW OAK STREET
PORTLAND, OREGON 97205
(503) 227-1254

PAE CONSULTING ENGINEERS
808 SW THIRD AVENUE
PORTLAND, OREGON 97204
(503) 226-2501

REGISTERED PROFESSIONAL ENGINEER 14,340 OREGON JULY 28, 1989 STEVEN J. REIDY

EXPIRES 12-31-04

REVISIONS : 1 03/21/03

DRAWN BY : TM
JOB NO. : 0115

DATE : 02/14/03
SCALE : NONE

DWG. NO. M0.01

THOMAS HACKER ARCHITECTS INC.

TERMINAL UNIT SCHEDULE

TERMINAL UNIT	TYPE	SERVICE AREA	INLET DIA. (IN)	SUPPLY CFM MAX	SUPPLY CFM MIN	HEATING CFM	HEATING COIL MBH	HEATING COIL GPM	NOTES
AHU-1									
TU-1-101	WR	ELECTRICAL	12	1,500	450	450	17.9	0.9	
TU-1-102	WR	EXECUTIVE DEAN	8	540	170	380	15.5	0.8	
TU-1-103	WR	ADMIN OFFICES	14	1,760	790	790	30.1	1.5	
TU-1-104	WR	DEAN OF STUDENTS	4	150	80	80	1.4	0.5	
TU-1-105	WR	DEAN OF INSTRUCTION	7	480	150	370	15.1	0.8	
TU-1-106	WR	CAREER CLASSROOM	10	980	480	480	7.8	0.5	2
TU-1-107	WR	CONFERENCE ROOM	7	460	150	480	7.2	0.5	
TU-1-108	WR	CORRIDOR	14	2,000	940	940	34.2	1.7	
TU-1-109	WR	STAFF WORKROOM	7	440	140	280	11.4	0.6	
TU-1-110	WR	PEN/PENCIL TESTING	12	1,380	660	660	11.0	0.6	1
TU-1-111	WR	EXTERIOR OFFICES	12	1,200	360	980	40.2	2.0	
TU-1-112	WR	HALLWAY	7	500	330	330	6.0	0.5	
TU-1-113	WR	CAREER CENTER	9	900	470	470	8.5	0.5	2
TU-1-114	WR	COMMONS	9	780	380	380	6.9	0.5	
TU-1-115	WR	COMMONS	8	600	380	380	6.9	0.5	
TU-1-116	WR	CONFERENCE ROOM	9	750	280	750	30.8	1.5	
TU-1-117	WR	COPY	5	250	80	80	1.3	0.5	
TU-1-118	WR	ADMIISSIONS	6	300	110	110	2.0	0.5	
TU-1-119	WR	ADMISSIONS	14	2,000	600	800	32.6	1.6	
TU-1-120	WR	ADMISSIONS	12	1,520	570	800	32.6	1.6	
TU-1-121	WR	FINICIAL AID	10	950	320	320	5.8	0.5	
TU-1-122	WR	ADMIN. CORD. OFFICE	7	440	140	440	20.8	1.0	
TU-1-123	WR	CASHIER	10	1,100	330	1,100	50.0	2.5	1
TU-1-201	WR	A/V WORKROOM	8	530	180	180	3.3	0.5	
TU-1-202	WR	A/V WORKROOM	8	640	200	640	26.1	1.3	
TU-1-203	WR	ELEV. ELEC. IT	12	1,340	410	410	8.2	0.5	
TU-1-204	WR	CIRCULATION WORKROOM	12	1,270	390	1,270	52.0	2.6	
TU-1-205	WR	STAFF LOUNGE	5	230	100	100	1.8	0.5	
TU-1-206	WR	RESERVES	10	1,100	1020	1020	39.3	2.0	
TU-1-207	WR	CIRCULATION WORKROOM	9	795	430	430	7.8	0.5	
TU-1-208	WR	CONFERENCE ROOM	6	380	150	150	2.5	0.5	
TU-1-209	WR	READING AREA	9	735	420	420	7.6	0.5	
TU-1-210	WR	READING AREA	12	1,680	640	1160	47.5	2.4	1
TU-1-211	WR	REFERENCE OFFICE	7	420	140	420	22.1	1.1	
TU-1-212	WR	A/V GROUP	7	440	170	170	2.9	0.5	
TU-1-213	WR	EXTERIOR PERIODICAL	10	960	300	560	22.9	1.1	
TU-1-214	WR	PERIODICAL COLLECTION	7	460	310	310	5.6	0.5	
TU-1-215	WR	READING AREA	12	1,680	640	1160	47.5	2.4	
TU-1-216	WR	LOBBY	10	950	450	950	52.1	2.6	1 2
TU-1-217	WR	COMP ROOM	6	400	220	400	24.7	1.2	
TU-1-218	WR	CONTROL ROOM	6	400	130	200	8.1	0.5	
TU-1-219	WR	GROUP STUDY	8	700	210	700	28.6	1.4	2
TU-1-220	WR	LEARNING CLASSROOM	12	1,200	670	670	25.2	1.3	2
AHU-2									
TU-2-101	WR	SHIPPING/RECEIVING	7	440	260	440	19.9	1.0	1
TU-2-102	WR	BOOKEEPING	12	2,000	530	2,000	82.0	4.1	
TU-2-103	WR	BOOKEEPING	12	1,400	870	870	15.6	0.8	
TU-2-104	WR	ELECTRIC ROOM	9	900	270	270	4.3	0.5	
TU-2-105	WR	TOILETS	8	770	310	310	5.5	0.5	
TU-2-106	WR	OFFICE	5	220	100	100	1.8	0.5	
TU-2-107	WR	LARGE CONFERENCE	14	1,760	1030	1030	16.6	0.8	
TU-2-108	VV	ELEVATOR MACHINE ROOM	6	400	120	120	1.7	0.5	
TU-2-109	WR	RECEPTION HALL	12	2,090	660	2,090	85.5	4.3	1
TU-2-110	WR	FOOD PROCESSING	8	720	310	450	18.3	0.9	
TU-2-111	WR	LARGE CONFERENCE	14	1,760	1030	1030	16.6	0.8	
TU-2-112	WR	LARGE CONFERENCE	14	1,960	1000	1310	53.6	2.7	
AHU-3									
TU-3-201	WR	LIBRARY	14	1,920	1080	1080	18.6	0.9	1 2
TU-3-202	WR	LIBRARY	14	1,940	590	1470	60.1	3.0	2
TU-3-203	WR	TOILETS	8	560	260	260	4.6	0.5	
TU-3-204	WR	IT/STORAGE	8	600	180	180	3.2	0.5	
TU-3-205	WR	GENERAL COLLECTION	8	720	480	480	8.6	0.5	
TU-3-206	WR	GENERAL COLLECTION	12	1,400	860	860	25.4	1.3	
TU-3-207	WR	EXTERIOR READING	10	1,100	360	730	29.7	1.5	
TU-3-208	WR	LARGE READING AREA	16	2,400	1060	1470	60.3	3.0	
TU-3-209	WR	LARGE READING AREA	16	2,300	1060	1470	60.3	3.0	
TU-3-210	WR	STUDY ROOMS	12	1,970	1930	1360	80.7	4.0	1

GENERAL NOTES:

2. ENTERING AIR TEMPERATURE 55°F
3. ALL HEATING COILS MUST MEET SUMMER CONDITIONS OF 120°F ENTERING WATER TEMP., LEAVING AIR TEMP. OF 75° & GPM AS INDICATED.
4. PROVIDE MINIMUM OF 36" CLEARANCE IN FRONT OF CONTROL BOXES.

NOTES:

1. 3-WAY CONTROL VALVE.
2. WRAP TERMINAL UNIT WITH DUCT SOUND CONTROL WRAP.

WINTER
ENTERING WATER TEMPERATURE 140°F
LAT AND GPM AS INDICATED

SUMMER
ENTERING WATER TEMPERATURE 120°F
LEAVING AIR TEMPERATURE 75°F

KEY

VV = VARIABLE AIR VOLUME TERMINAL UNIT
VVR = VARIABLE AIR VOLUME TERMINAL UNIT WITH REHEAT COIL.
CVR = CONSTANT AIR VOLUME TERMINAL UNIT WITH REHEAT COIL.
TU – X – XXX

- TERMINAL UNIT NUMBER
- FLOOR UNIT IS LOCATED ON
- AIR HANDLER NUMBER
- TERMINAL UNIT

EVAPORATIVE CONDENSING CHILLERS

TAG NUMBER	ACTUAL CAPACITY (TONS)	CONDENSING TEMP (AMBIENT/WB)	EVAPORATOR EWT F	EVAPORATOR LWT F	EVAPORATOR GPM	EVAPORATOR MAX WPD FT (wg.)	EVAPORATOR FOULING FACTOR	ELECTRICAL COMPRESSOR RLA QTY.	COMPRESSOR RLA RLA/COMP	FAN FLA QTY.	FAN FLA FLA/FAN	UNIT MCA CKT 1	VOLTS/ø	CONTROL POWER KW/V/PH	KW/TON	EER	IPLV	UNIT HEAT TAPE MCA/V/PH	INDUSTIAL COLD WATER (ICW) QTY.	INDUSTIAL COLD WATER (ICW) SIZE	WEIGHT (LBS)	BASED ON:	NOTES
ECC-1	210	105/70	59	43	300	15	.00025	4	96.5	4	3.5	436	460/3	1.0/120/1	0.76	14.7	17.6	20/208/1	2	1"	16,000	McQUAY EGR-220	1 2 3

NOTES: 1. PROVIDE SINGLE POINT POWER CONNECTION.
2. PROVIDE ENCLOSED CHEMICAL TREATMENT SYSTEM.
3. SEE SPECIFICATIONS FOR UNIT VIBRATION ISOLATION.

EXHAUST FANS

TAG NUMBER	LOCATION	SERVICE	TYPE	CFM	TSP (in. wg)	FAN RPM	MOTOR HP	MOTOR VOLTS/ø	APPROX. WEIGHT (LBS)	BASED ON	NOTES
EF-1	MECHANICAL ROOM	TOILET EXHAUST	INLINE	2,780	1.0	1,299	1.0	208/3	250	GREENHECK BSQ-160	1 2
EF-2	MECHANICAL ROOM	STAFF LOUNGE	INLINE	480	0.75	1,760	0.33	120/1	150	GREENHECK BSQ-80	1 2

NOTES: 1. PROVIDE STARTERS AND DISCONNECTS.
2. PROVIDE AUTOMATIC DAMPER.

BOILERS

TAG NUMBER	BOILER TYPE	INPUT CAPACITY MBH	OUTPUT CAPACITY MBH	SUPPLY TEMP F	RETURN TEMP F	GPM	MAX WPD (FT.)	FUEL TYPE	ELECTRICAL VOLTS/ø	ELECTRICAL FLA	BASED ON	NOTES
B-1	HIGH EFFICIENCY, CONDENSING	1,000	900	140	100	45	5	2 PSI NAT. GAS	120/1	20	AERCO KC-1000	1
B-2	HIGH EFFICIENCY, CONDENSING	1,000	900	140	100	45	5	2 PSI NAT. GAS	120/1	20	AERCO KC-1000	1
B-3	HIGH EFFICIENCY, CONDENSING	1,000	900	140	100	45	5	2 PSI NAT. GAS	120/1	20	AERCO KC-1000	1

NOTES: 1. PROVIDE SINGLE MASTER BOILER CONTROL PANEL FOR ALL BOILERS.

PUMPS

TAG NUMBER	LOCATION	SERVICE	PUMP TYPE	FLOW GPM	HEAD (ft. wg)	EFF %	MOTOR HP	MOTOR VOLTS/ø	MOTOR RPM	BASED ON	NOTES
CHWP-1	MECHNICAL ROOM 225	ECC-1	IN-LINE	310	36	71%	5	460/3	1750	B&G SERIES 80 5x5x7	
CHWP-2	MECHNICAL ROOM 225	ECC-1	IN-LINE	310	36	71%	5	460/3	1750	B&G SERIES 80 5x5x7	
CHWP-3	MECHNICAL ROOM 225	BUILDING/AHU COILS	IN-LINE	310	92	71%	15	460/3	1750	B&G SERIES 80 3x3x9½B	VFD DRIVEN
CHWP-4	MECHNICAL ROOM 225	BUILDING/AHU COILS	IN-LINE	310	92	71%	15	460/3	1750	B&G SERIES 80 3x3x9½B	VFD DRIVEN
HWP-1	MECHNICAL ROOM 224	BOILER B-1	IN-LINE	45	25	40%	0.75	460/3	1750	B&G SERIES 80 2x2x7	
HWP-2	MECHNICAL ROOM 224	BOILER B-2	IN-LINE	45	25	40%	0.75	460/3	1750	B&G SERIES 80 2x2x7	
HWP-3	MECHNICAL ROOM 224	BOILER B-3	IN-LINE	45	25	40%	0.75	460/3	1750	B&G SERIES 80 2x2x7	
HWP-4	MECHNICAL ROOM 224	BUILDING PUMP	IN-LINE	135	88	65%	7.5	460/3	1750	B&G SERIES 80 2½x2½x9½B	VFD DRIVEN
HWP-5	MECHNICAL ROOM 224	BUIDLING PUMP	IN-LINE	135	88	65%	7.5	460/3	1750	B&G SERIES 80 2½x2½x9½B	VFD DRIVEN
HWP-6	MECHNICAL ROOM 225	AHU-1 HEATING COIL	IN-LINE	30	18	36%	0.50	460/3	1750	B&G SERIES 80 1½x1½x7B	
HWP-7	MECHNICAL ROOM 234	AHU-2 HEATING COIL	IN-LINE	14.5	18	36%	0.33	120/1	1750	GRUNDFOS UP-43-75	
HWP-8	MECHNICAL ROOM 234	AHU-3 HEATING COIL	IN-LINE	17.9	18	36%	0.33	120/1	1750	GRUNDFOS UP-43-75	

GENERAL NOTES: 1. PROVIDE STARTERS AND DISCONNECTS FOR UNITS WITHOUT VFD DRIVES.

FIN TUBE RADIATORS

ITEM	LOCATION	OUTPUT BTU/HR/LINEAR FOOT	WTD (F)	EWT (F)	GPM	FINS (PER FOOT)	SIZE	BASED ON	REMARKS
FTR-1	---	375	12	140	0.25	50	3¼x3¼	TRANE E3	INFORMATION PROVIDED IS FOR A SINGLE 4' SECTION, PROVIDE ENCLOSURE EXTENSIONS FOR PIPING AT ENDS.

CABINET UNIT HEATERS

TAG NUMBER	TYPE	LOCATION	CAPACITY OUTPUT MBH	CFM	MOTOR HP	MOTOR VOLTS	MOTOR PH	COIL EWT F	COIL GPM	COIL MIN WTD F	BASED ON	OPERATING WEIGHT LBS	REMARKS
CUH-1	CABINET UNIT HEATER	SHIPPING/RECIEVING	20	340	1/16	120	1	140	2.0	40	TRANE FFCB040	120	
CUH-2	CABINET UNIT HEATER	VESTIBULE 137	20	340	1/16	120	1	140	2.0	40	TRANE FFBB040	120	1

GENERAL NOTES: 1. PROVIDE LOW VOLTAGE THERMOSTAT.

NOTES: 1. PROVIDE 3-WAY CONTROL VALVE

DUCT SILENCERS

TAG NUMBER	SERVICE	LENGTH (FT.)	S.P. DROP (IN.)	MODEL NUMBER	BASED ON:	DIMENSIONS
ST-1	AHU-1	5	0.15	IAC LFL	INDUSTRIAL ACOUSTIC COMPANY	60x24
ST-2	AHU-1	3	0.09	IAC L	INDUSTRIAL ACOUSTIC COMPANY	108x18
ST-3	AHU-3	3	0.14	IAC LFL	INDUSTRIAL ACOUSTIC COMPANY	84x18
ST-4	TU-3-201	3	0.10	IAC LFL	INDUSTRIAL ACOUSTIC COMPANY	24x12
ST-5	TU-3-202	3	0.10	IAC LFL	INDUSTRIAL ACOUSTIC COMPANY	24x12
ST-6	AHU-2	3	0.10	IAC L	INDUSTRIAL ACOUSTIC COMPANY	42x12
ST-7	AHU-2	3	0.10	IAC L	INDUSTRIAL ACOUSTIC COMPANY	48x18

GENERAL NOTES:

1. PROVIDE DUCTWORK TRANSITIONS TO ACCOMODATE SOUND TRAP SIZE.

AIR SEPARATORS

TAG NUMBER	LOCATION	SERVICE	GPM	MPD	BASED ON	NOTES
AS-1	SECOND FLOOR MECH ROOM	HEATING WATER SERVICE	135	2'	B&G RL-3	
AS-2	SECOND FLOOR MECH ROOM	CHILLED WATER SERVICE	300	2'	B&G RL-5	

ROOF VENTS

TAG NUMBER	THROAT AREA (SQ.FT.)	THROAT SIZE	HEIGHT	NO. OF LOUVERS	SERVICE	BASED ON	NOTES
EAV-1	3.1	16x28	12¼"	4	HOISTWAY VENT	GREENHECK WRH	

GENERAL NOTES:

1. HEIGHT LISTED DOES NOT INLCUDE HEIGHT OF ROOF CURB.

AIR HANDLING UNIT SCHEDULE

ITEM	LOCATION	AREA SERVED	SUPPLY AIRFLOW CFM	SUPPLY MIN OSA CFM	SUPPLY TSP IN WG	SUPPLY FAN RPM	SUPPLY BHP	SUPPLY VFD	SUPPLY MOTOR HP	SUPPLY MOTOR VOLT/PH	COOLING COIL EAT DB	COOLING COIL EAT WB	COOLING COIL LAT DB	COOLING COIL LAT WB	COOLING COIL MIN WTR	COOLING COIL EWT F	COOLING COIL COIL GPM	COOLING COIL WPD FT WG	HEATING COIL EAT	HEATING COIL LAT	HEATING COIL MIN WTD	HEATING COIL EWT F	HEATING COIL COIL GPM	RETURN AIRFLOW CFM	RETURN TSP IN WG	RETURN FAN RPM	RETURN BHP	RETURN VFD	RETURN MOTOR HP	RETURN MOTOR VOLT/PH	OPER WT LBS	REMARKS
AHU-1	SOUTH 2ND FLOOR MECHANICAL ROOM	ADMIN/MEDIA	34,500	10,950	5.50	1,219	41.4	YES	50	460/3	80.6	64.5	52	52	16	43	165.7	18	55.3	70.0	40	140	27.6	32,000	1.25	494	10.0	YES	15	460/3	28,000	
AHU-2	NORTH 2ND FLOOR MECHANICAL ROOM	FIRST FLOOR	14,000	5,350	5.40	2,150	18.3	YES	20	460/3	80	65	52	52	16	43	69.6	18	52.1	70.0	40	140	13.6	12,000	1.50	1068	4.62	YES	7.5	460/3	15,000	
AHU-3	2ND FLOOR MECHANICAL ROOM	SECOND FLOOR	14,000	6,650	5.40	2,150	18.3	YES	20	460/3	83	65.5	52	52	16	43	77	18	47.6	70.0	40	140	17.0	12,500	1.50	1097	4.92	YES	7.5	460/3	15,000	

GENERAL NOTES:

1. UNITS MOUNTED ON CONCRETE CURBS, SEE VIBRATION ISOLATION SPECIFICATIONS FOR INTERNAL AND EXTERNAL ISOLATION REQUIREMENTS.
2. ALL SUPPLY AND RETURN FAN MOTORS TO BE 460 VOLT/3ø WITH VARIABLE FREQUENCY DRIVES.
3. HEATING COILS BASED ON MAX FACE VELOCITY OF 650 FPM, 0.2 IN MAX (wg) APD, 140 F EWT AND 5 FT (wg) MAX WPD.
4. COOLING COILS BASED ON MAX FACE VELOCITY OF 500 FPM, 0.75 IN MAX (wg) APD AND 43 F EWT AND 18 FT(wg.) MAX WPD.
5. MINIMUM OSA CALCULATED BASED ON ASHRAE STANDARD 62.

SCHEDULES – MECHANICAL

PCC ROCK CREEK CAMPUS
NEW BUILDING

PORTLAND COMMUNITY COLLEGE
ROCK CREEK CAMPUS
17705 NW Springville Road
PORTLAND, OREGON 97229

THOMAS HACKER ARCHITECTS INC
721 SW OAK STREET
PORTLAND, OREGON 97205
(503) 227-1254

PAE CONSULTING ENGINEERS
808 SW THIRD AVENUE
PORTLAND, OREGON 97204
(503) 226-2921

REGISTERED PROFESSIONAL ENGINEER 14-640 OREGON JULY 26, 1988 STEVEN J. REIDY
EXPIRES 12-31-04

REVISIONS : 1 03/21/03

DATE : 02/14/03
SCALE : NONE

DRAWN BY : TM
JOB NO. : 0115

DWG. NO. M0.02

THOMAS HACKER ARCHITECTS INC.

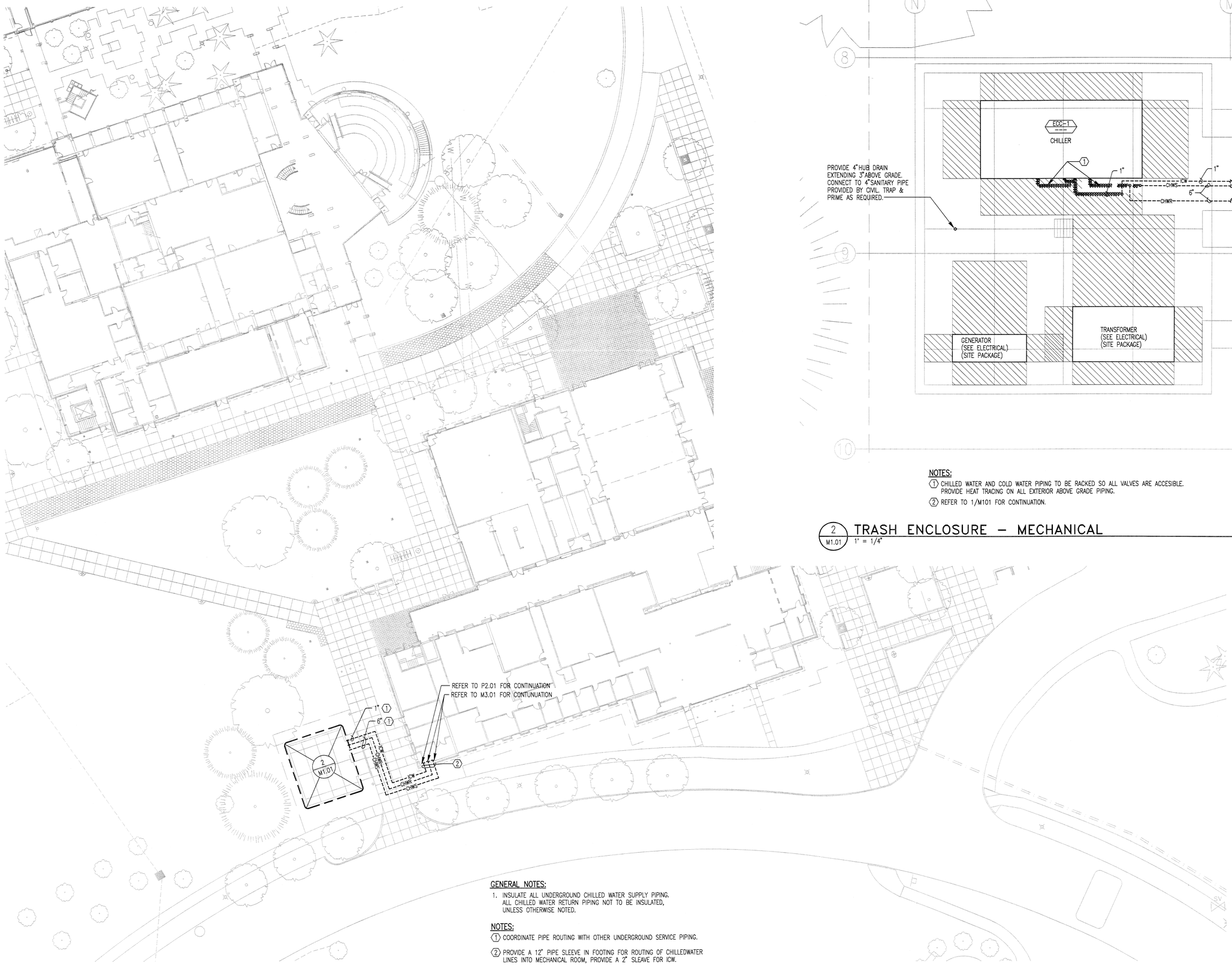

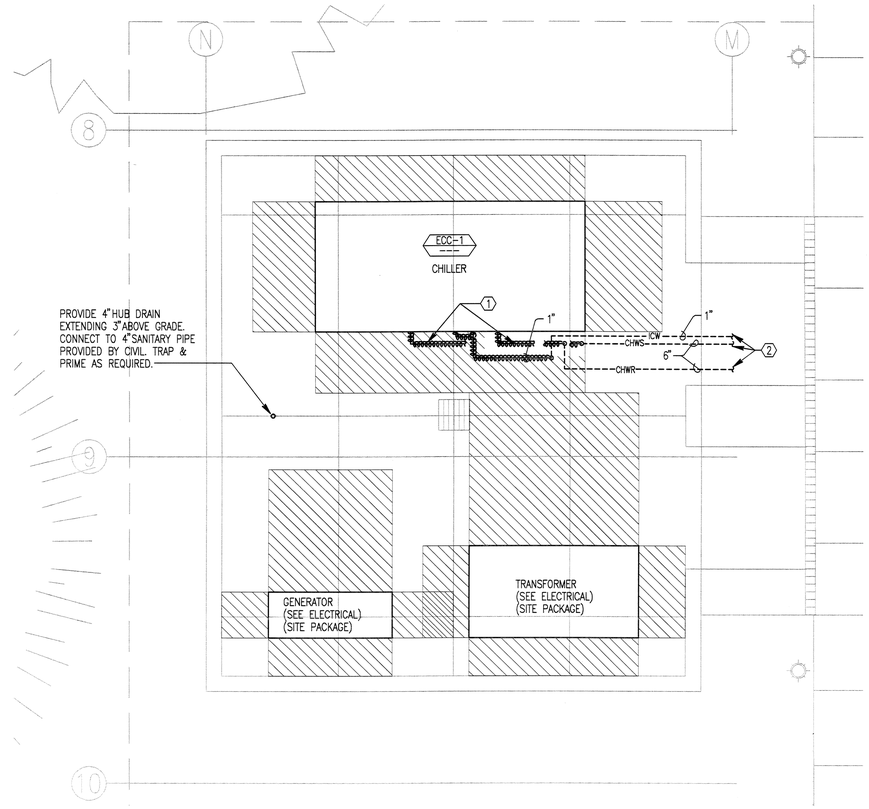

NOTES:

1. CHILLED WATER AND COLD WATER PIPING TO BE RACKED SO ALL VALVES ARE ACCESIBLE. PROVIDE HEAT TRACING ON ALL EXTERIOR ABOVE GRADE PIPING.
2. REFER TO 1/M101 FOR CONTINUATION.

2 / M1.01 TRASH ENCLOSURE – MECHANICAL

1" = 1/4"

GENERAL NOTES:

1. INSULATE ALL UNDERGROUND CHILLED WATER SUPPLY PIPING. ALL CHILLED WATER RETURN PIPING NOT TO BE INSULATED, UNLESS OTHERWISE NOTED.

NOTES:

1. COORDINATE PIPE ROUTING WITH OTHER UNDERGROUND SERVICE PIPING.
2. PROVIDE A 12" PIPE SLEEVE IN FOOTING FOR ROUTING OF CHILLEDWATER LINES INTO MECHANICAL ROOM, PROVIDE A 2" SLEAVE FOR ICW.

1 / M1.01 SITE PLAN – MECHANICAL

1" = 20'-0"

SITE PLAN
MECHANICAL

PCC ROCK CREEK CAMPUS
NEW BUILDING

PORTLAND COMMUNITY COLLEGE
ROCK CREEK CAMPUS
17705 NW Springville Road
PORTLAND, OREGON 97229

THOMAS HACKER ARCHITECTS INC
731 SW OAK STREET
PORTLAND, OREGON 97205
(503) 227-1254

PAE CONSULTING ENGINEERS
808 SW THIRD AVENUE
PORTLAND, OREGON 97204
(503) 226-2921

REGISTERED PROFESSIONAL ENGINEER
16-5401
OREGON
JULY 25, 1986
STEVEN J. REIDY
EXPIRES 12-31-04

REVISIONS : 1 3/21/03

DRAWN BY : TM
JOB NO. : 0115

DATE : 02/14/03
SCALE : AS SHOWN

DWG. NO. M1.01

THOMAS HACKER
ARCHITECTS INC.

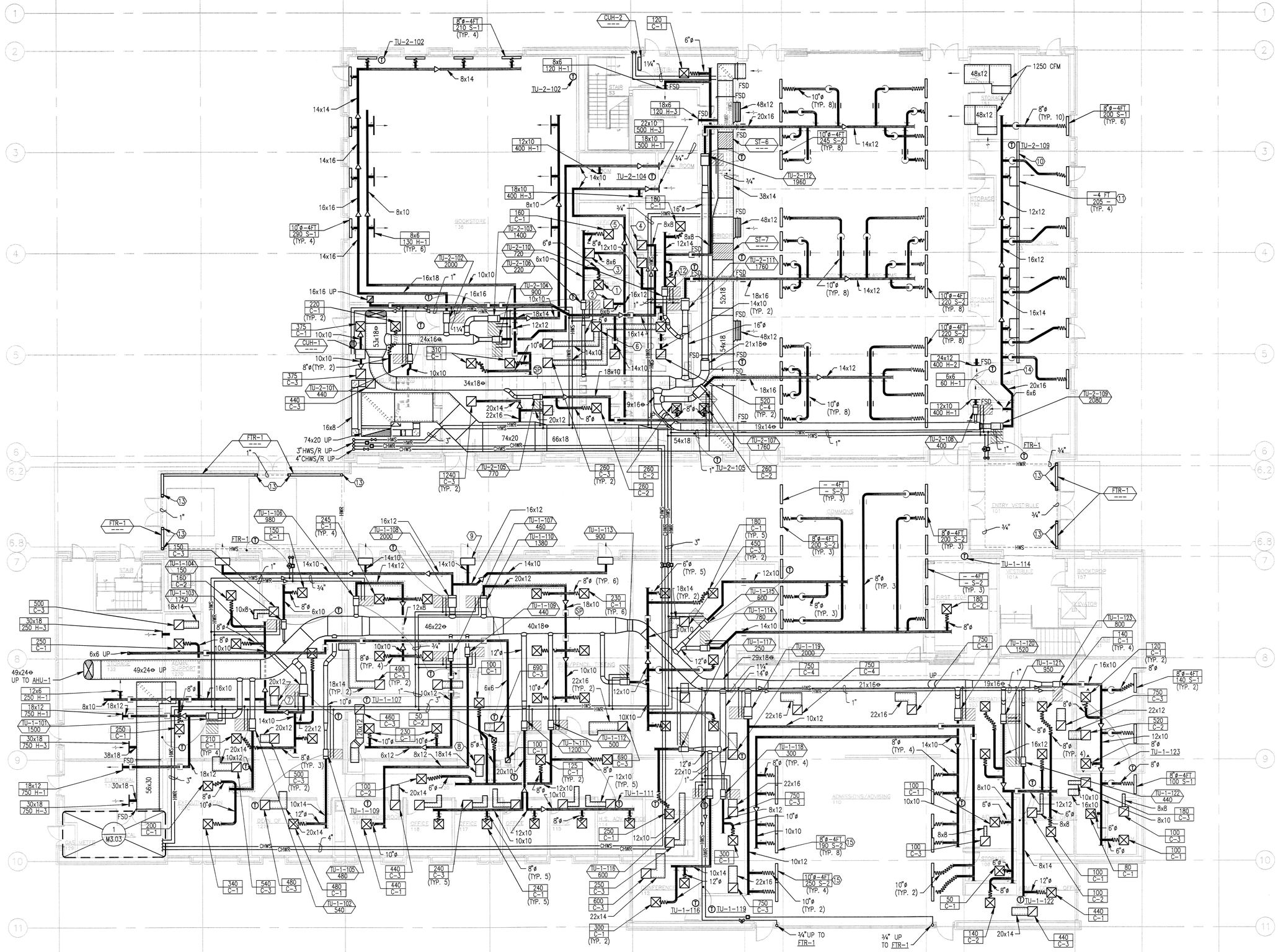

1 M201 FIRST FLOOR PLAN –MECHANICAL
SCALE: 1/8" = 1'-0"

GENERAL NOTES:

1. ALL BRANCH PIPING TO TERMINAL UNITS, CABINET UNIT HEATERS, AND UNIT HEATERS TO BE ¾" UNLESS OTHERWISE NOTED.

NOTES:

1. 60 / C-1
2. 60 / C-3
3. 160 / C-3
4. 230 / C-3
5. 420 / C-3
6. 260 / C-4
7. 16x12
8. 450 / C-3
9. CONNECT TO GRILLES BY OTHERS. SEE ARCHITECTURE DRAWINGS BALANCE TO 500 CFM EACH.
10. OPEN TO GRILLE FOR RETURN AIR TO CEILING. FOR GRILLE SEE ARCHITECTURAL DRAWINGS.
11. CONNECT TO GRILLE BY OTHERS. SEE ARCHITECTURAL DRAWINGS.
12. 300 / C-1
13. PROVIDE ENCLOSURE EXTENSIONS TO HOUSE PIPING.
14. ROUTE DUCT OVER STRUCTURAL LID.
15. BLANK OFF 1" OF SLOT DIFFUSER. INSTALL SPECIFIED PLENUM BOOT OVER SLOT DIFFUSER.

FIRST FLOOR PLAN HVAC

PCC ROCK CREEK CAMPUS NEW BUILDING

PORTLAND COMMUNITY COLLEGE
ROCK CREEK CAMPUS
17705 NW Springville Road
PORTLAND, OREGON 97229

THOMAS HACKER ARCHITECTS INC
733 SW OAK STREET
PORTLAND, OREGON 97205
(503) 227-1254

PAE CONSULTING ENGINEERS
808 SW THIRD AVENUE
PORTLAND, OREGON 97204
(503) 226-2921

REGISTERED PROFESSIONAL ENGINEER 14,540 OREGON JULY 25, 1986 STEVEN J. REIDY
EXPIRES 12-31-04

REVISIONS : 1 03/21/03

DATE : 02/14/03
SCALE : 1/8" = 1'-0"

DRAWN BY : TM
JOB NO. : 0115

DWG. NO. M2.01

THOMAS HACKER ARCHITECTS INC.

16:03 03/19/03 0869900 809M201.dwg x:\STORSUR\STORDRGP e:7809F1,1B809X,7809G1,P1N170NE,7809E1G1 Dxview [XCSB825F.pc3 XCSB825F.ctb]

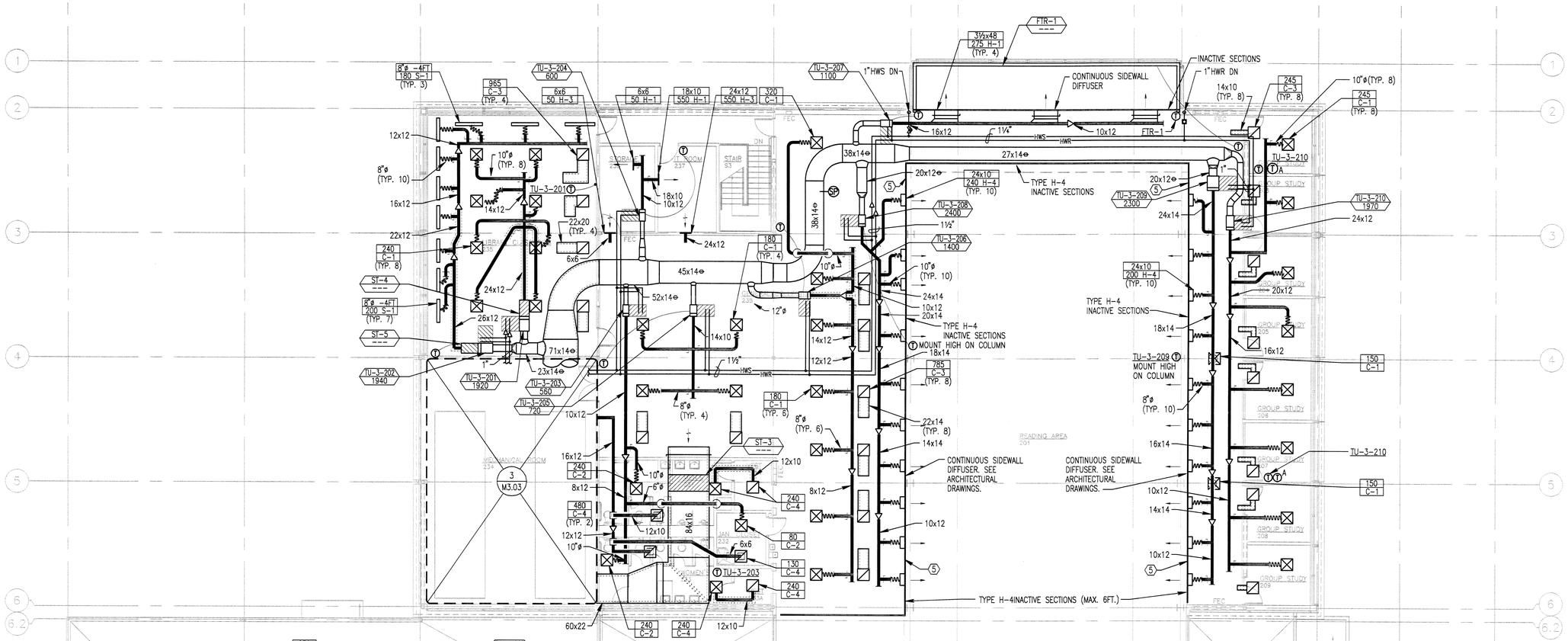

1 M202 SECOND FLOOR PLAN –MECHANICAL
SCALE: 1/8" = 1'-0"

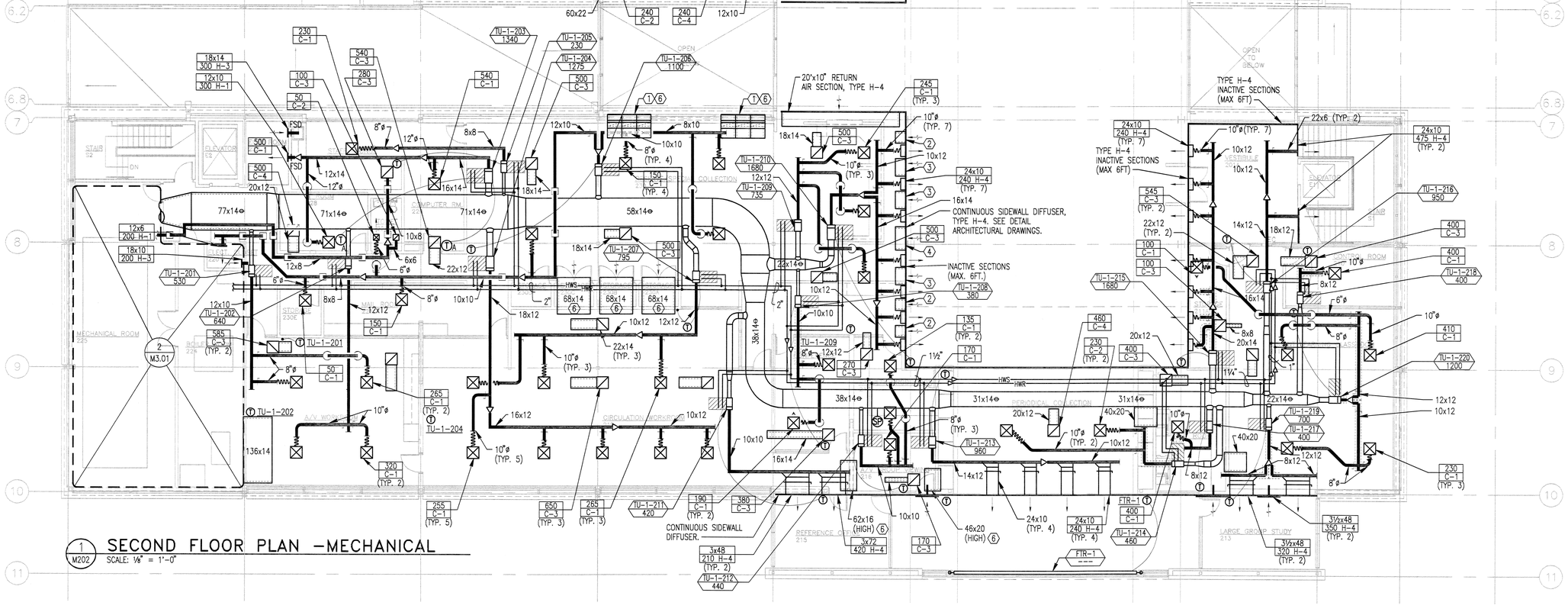

1 M202 SECOND FLOOR PLAN –MECHANICAL
SCALE: 1/8" = 1'-0"

GENERAL NOTES:

1. ALL BRANCH PIPING TO TERMINAL UNITS, CABINET UNIT HEATERS, AND UNIT HEATERS TO BE ¾" UNLESS OTHERWISE NOTED.

NOTES:

1. 3 – 30x8 LINED DUCTS. CONNECT TO ARCHITECTURAL GRILLE. RISE UP INTO STRUCTURE WITH 2" OFFSET.
2. 2'x10" RETURN AIR SECTION.
3. 3'x10" RETURN AIR SECTION.
4. 5'x10" RETURN AIR SECTION.
5. RUNNING CONTROL WIRE AND CONDUIT. CONNECT TO OPERABLE WINDOW ACTUATOR CONDUIT BY DIV 16.
6. HOLD TIGHT TO STRUCTURE.

SECOND FLOOR PLAN
HVAC

PCC ROCK CREEK CAMPUS
NEW BUILDING

PORTLAND COMMUNITY COLLEGE
ROCK CREEK CAMPUS
17705 NW Springville Road
PORTLAND, OREGON 97229

THOMAS HACKER ARCHITECTS INC
733 SW OAK STREET
PORTLAND, OREGON 97205
(503) 227-1254

PAE CONSULTING ENGINEERS
808 SW THIRD AVENUE
PORTLAND, OREGON 97204
(503) 226-2921

REGISTERED PROFESSIONAL ENGINEER 14540 OREGON JULY 26, 1989 STEVEN J. REIDY
EXPIRES 12-31-04

REVISIONS : 1 03/21/03

DATE : 02/14/03
SCALE : 1/8" = 1'-0"

DRAWN BY : TM
JOB NO. : 0115

DWG. NO. M2.02

THOMAS HACKER ARCHITECTS INC.

11:18 03/20/03 0080900 BDM202.dwg x:\80912.STORS\RSTORSGRP o:TB06X,Z80961 Textfilm [XE58825F XE58825F.pc3 XE58825F.ctb]

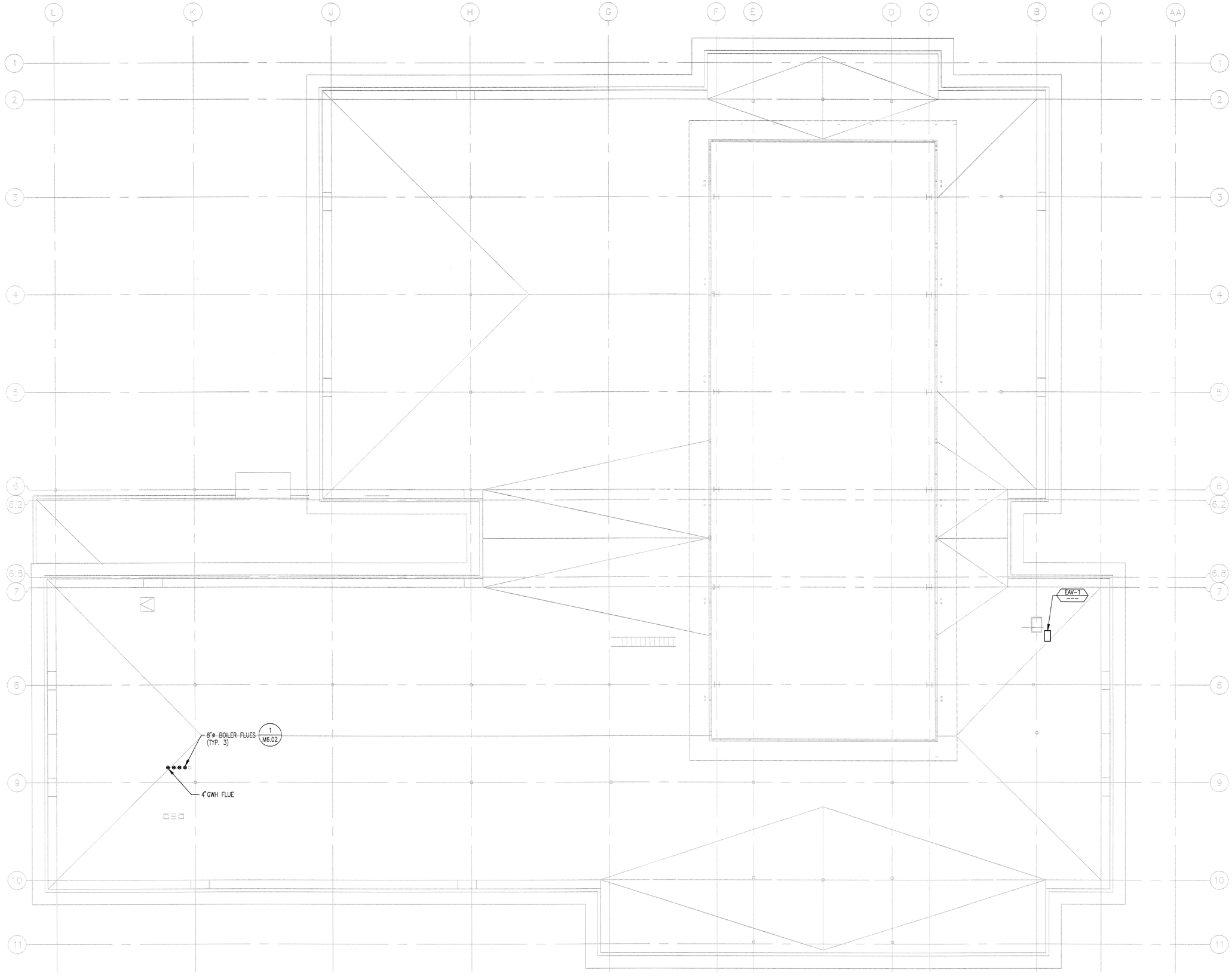

1 / M203 ROOF PLAN – MECHANICAL
SCALE: 1/8" = 1'-0"

ROOF PLAN
HVAC

PCC ROCK CREEK CAMPUS
NEW BUILDING

PORTLAND COMMUNITY COLLEGE
ROCK CREEK CAMPUS
17705 NW Springville Road
PORTLAND, OREGON 97229

THOMAS HACKER ARCHITECTS INC
733 SW OAK STREET
PORTLAND, OREGON 97205
(503) 227-1254

PAE CONSULTING ENGINEERS
806 SW THIRD AVENUE
PORTLAND, OREGON 97204
(503) 226-2921

REGISTERED PROFESSIONAL ENGINEER
14540
OREGON
JULY 26, 1983
STEVEN J. REIDY
EXPIRES 12-31-04

REVISIONS :

DRAWN BY : TM
JOB NO. : 0115

DATE : 02/14/03
SCALE : NONE

DWG. NO. M2.03

THOMAS HACKER
ARCHITECTS INC.

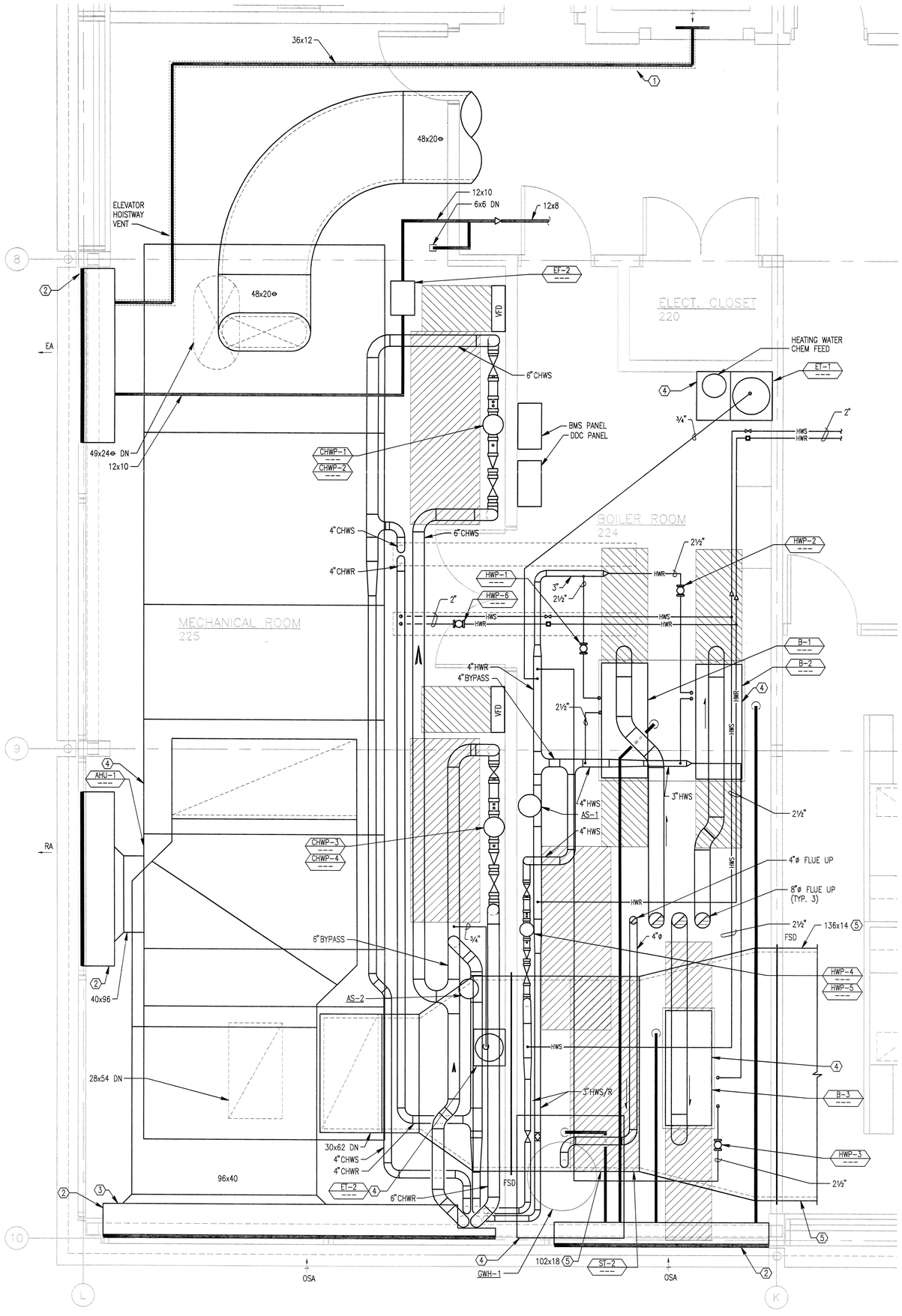

1 M3.01 SECOND FLOOR MECHANICAL ROOM – HVAC

SCALE: 1/2" = 1'-0"

NOTES:

1. WRAP HOISTWAY DUCT WITH 2-HR FIRE WRAP
2. PROVIDE 18" DEEP PLENUM AT BACK OF LOUVER. SLOPE TO LOUVER DRAIN POINT. COORDINATE PLENUM LOCATION WITH FINISHED WALL.
3. CONNECT DUCT TO BACK OF PLENUM.
4. HOUSEKEEPING PAD
5. RUN DUCT ABOVE ALL PIPING & EQUIPMENT

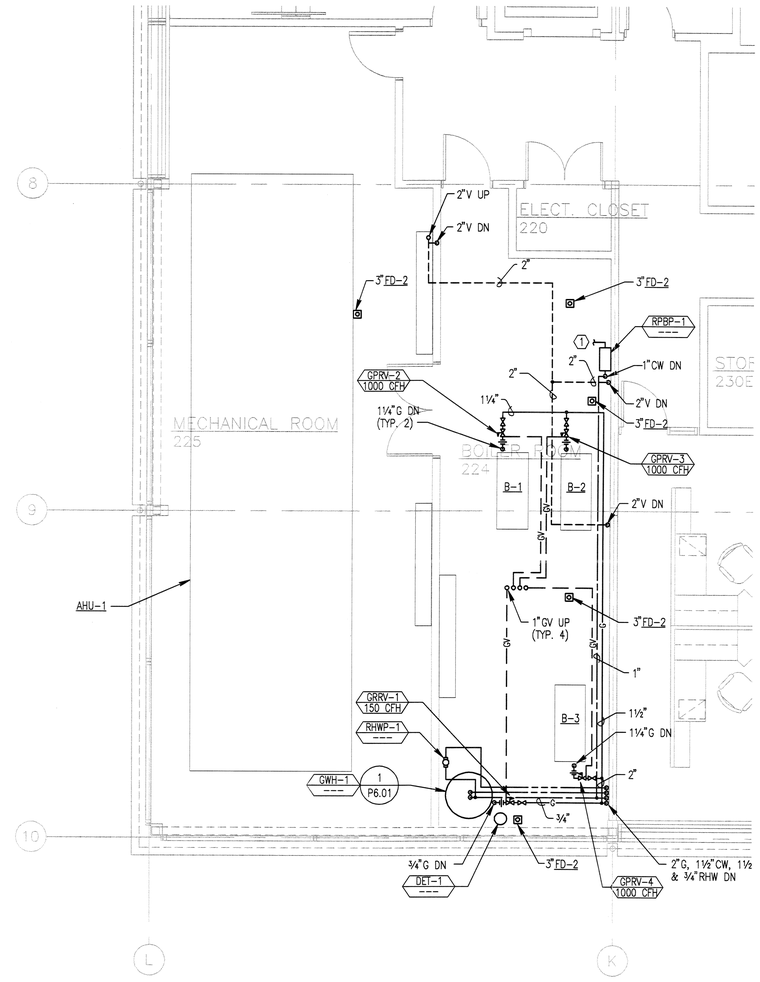

NOTES:

1. SEE DETAIL 2/M6.02 FOR CONNECTION TO HEATING WATER AND CHILLED WATER MAKE-UP.

2 M3.01 SECOND FLOOR MECHANICAL ROOM – PLUMBING

SCALE: 1/4" = 1'-0"

PARTIAL PLANS
HVAC

PCC ROCK CREEK CAMPUS
NEW BUILDING

PORTLAND COMMUNITY COLLEGE
ROCK CREEK CAMPUS
17705 NW Springville Road
PORTLAND, OREGON 97229

THOMAS HACKER ARCHITECTS INC
733 SW OAK STREET
PORTLAND, OREGON 97205
(503) 227-1254

PAE CONSULTING ENGINEERS
808 SW THIRD AVENUE
PORTLAND, OREGON 97204
(503) 226-2921

REGISTERED PROFESSIONAL ENGINEER 16640 OREGON JULY 28, 1989 STEVEN J. REIDY

EXPIRES 12-31-04

REVISIONS : 1 03/21/03

DATE : 02/14/03
SCALE : N/A

DRAWN BY : TM
JOB NO. : 0115

DWG. NO. M3.01

THOMAS HACKER ARCHITECTS INC.

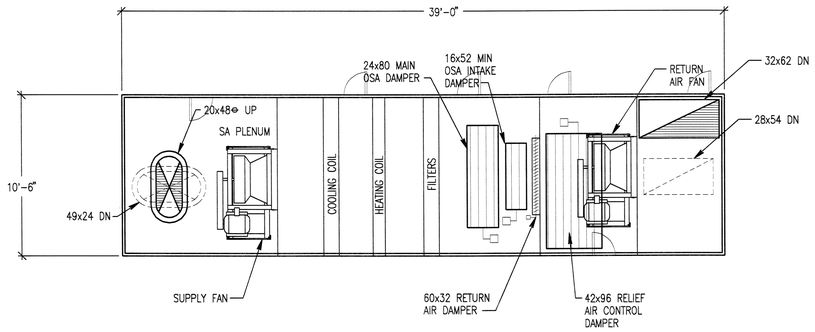

GENERAL NOTES:

1. UNIT TO BE MINIMUM 7' TALL. FROM UNIT FLOOR TO INSIDE OF UNIT ROOF
2. RETURN AIR DAMPER AND OSA DAMPER TO BE PARRALLEL BLADE. ANGLE OSA DAMPER BLADES TOWARDS RETURN AIR DAMPER. ANGLE RETURN AIR DAMPER TOWARDS OSA DAMPE.
3. RELIEF AIR DAMPER TO BE OPPOSED BLADE.
4. COORDINATE DUCT OPENING LOCATIONS IN UNIT WITH STRUCTURAL FLOOR PENETRATIONS.

1 / M3.02 AHU-1 PLAN – 2ND FLOOR MECHANICAL ROOM # 225

SCALE: 1/4" = 1'-0"

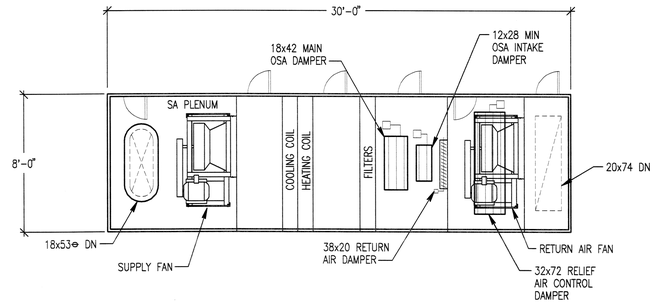

GENERAL NOTES:

1. UNIT TO BE MINIMUM 7' TALL, FROM UNIT FINISHED FLOOR TO INSIDE OF UNIT ROOF
2. RETURN AIR DAMPER AND OSA DAMPER TO BE PARRALLEL BLADE. ANGLE OSA DAMPER BLADES TOWARDS RETURN AIR DAMPER. ANGLE RETURN AIR DAMPER TOWARDS OSA DAMPE.
3. RELIEF AIR DAMPER TO BE OPPOSED BLADE.
4. COORDINATE DUCT OPENING LOCATIONS IN UNIT WITH STRUCTURAL FLOOR PENETRATIONS.

2 / M3.02 AHU-2 PLAN – 2ND FLOOR MECHANICAL ROOM # 234

SCALE: 1/4" = 1'-0"

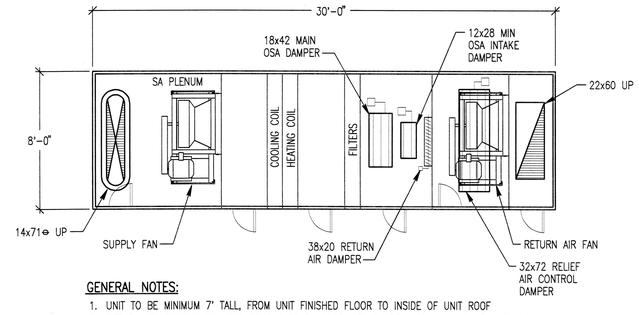

GENERAL NOTES:

1. UNIT TO BE MINIMUM 7' TALL, FROM UNIT FINISHED FLOOR TO INSIDE OF UNIT ROOF
2. RETURN AIR DAMPER AND OSA DAMPER TO BE PARRALLEL BLADE. ANGLE OSA DAMPER BLADES TOWARDS RETURN AIR DAMPER. ANGLE RETURN AIR DAMPER TOWARDS OSA DAMPE.
3. RELIEF AIR DAMPER TO BE OPPOSED BLADE.
4. COORDINATE DUCT OPENING LOCATIONS IN UNIT WITH STRUCTURAL FLOOR PENETRATIONS.

3 / M3.02 AHU-3 PLAN – 2ND FLOOR MECHANICAL ROOM # 234

SCALE: 1/4" = 1'-0"

DETAILS – MECHANICAL

PCC ROCK CREEK CAMPUS
NEW BUILDING

PORTLAND COMMUNITY COLLEGE
ROCK CREEK CAMPUS
17705 NW Springville Road
PORTLAND, OREGON 97229

THOMAS HACKER ARCHITECTS INC
720 SW OAK STREET
PORTLAND, OREGON 97205
(503) 227-1254

PAE CONSULTING ENGINEERS
808 SW THIRD AVENUE
PORTLAND, OREGON 97204
(503) 226-2921

REGISTERED PROFESSIONAL ENGINEER 16540 OREGON JAN 28, 1983 STEVEN J. REIDY

EXPIRES 12-31-04

REVISIONS :

DRAWN BY : RRK
JOB NO. : 0115

DATE : 02/14/03
SCALE : NONE

DWG. NO. M3.02

THOMAS HACKER ARCHITECTS INC.

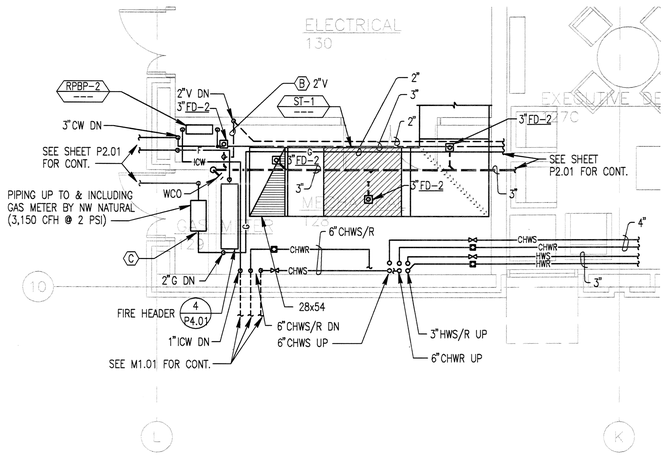

1 M3.03 FIRST FLOOR – MECHANICAL ROOM

SCALE: 1/4" = 1'-0"

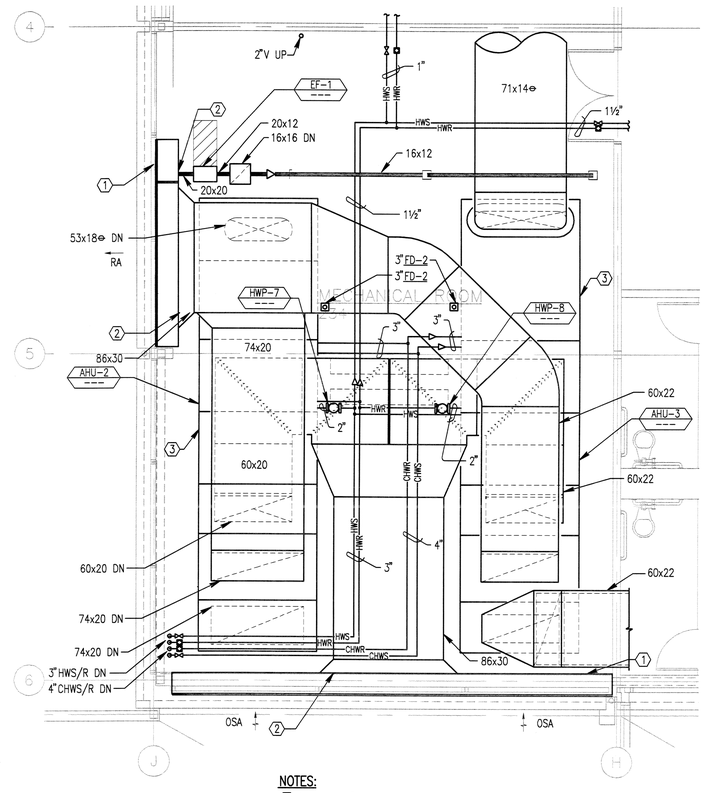

NOTES:

1. PROVIDE 18" DEEP PLENUM AT BACK OF LOUVER. SLOPE TO LOUVER DRAIN POINT. COORDINATE PLENUM LOCATION WITH EXTERIOR WALL.
2. CONNECT DUCT TO BACK OF PLENUM.
3. HOUSEKEEPING PAD.

2 M3.03 SECOND FLOOR MECHANICAL ROOM – NORTH

SCALE: 1/4" = 1'-0"

PARTIAL PLANS
HVAC

PCC ROCK CREEK CAMPUS
NEW BUILDING

PORTLAND COMMUNITY COLLEGE
ROCK CREEK CAMPUS
17705 NW Springville Road
PORTLAND, OREGON 97229

THOMAS HACKER ARCHITECTS INC
733 SW OAK STREET
PORTLAND, OREGON 97205
(503) 227-1254

PAE CONSULTING ENGINEERS
808 SW THIRD AVENUE
PORTLAND, OREGON 97204
(503) 226-2921

REGISTERED PROFESSIONAL ENGINEER
16540
OREGON
JULY 26, 1985
STEVEN J. REIDY
EXPIRES 12-31-04

REVISIONS : 1 03/21/03

DATE : 02/14/03
SCALE : NOTED

DRAWN BY : TM
JOB NO. : 0115

DWG. NO. M3.03

THOMAS HACKER
ARCHITECTS INC.

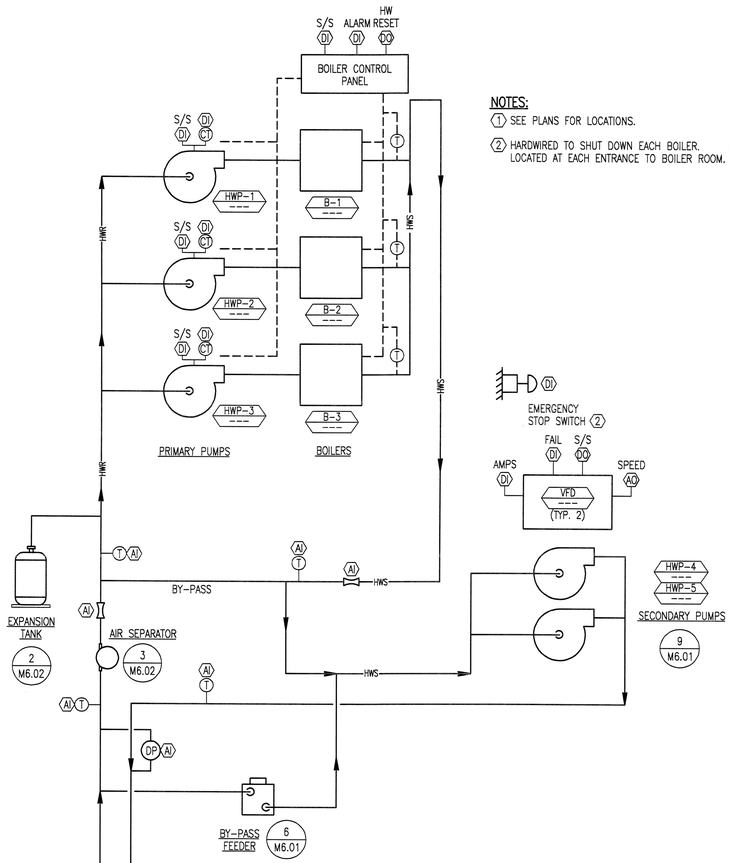

NOTES:

1. SEE PLANS FOR LOCATIONS.
2. HARDWIRED TO SHUT DOWN EACH BOILER. LOCATED AT EACH ENTRANCE TO BOILER ROOM.

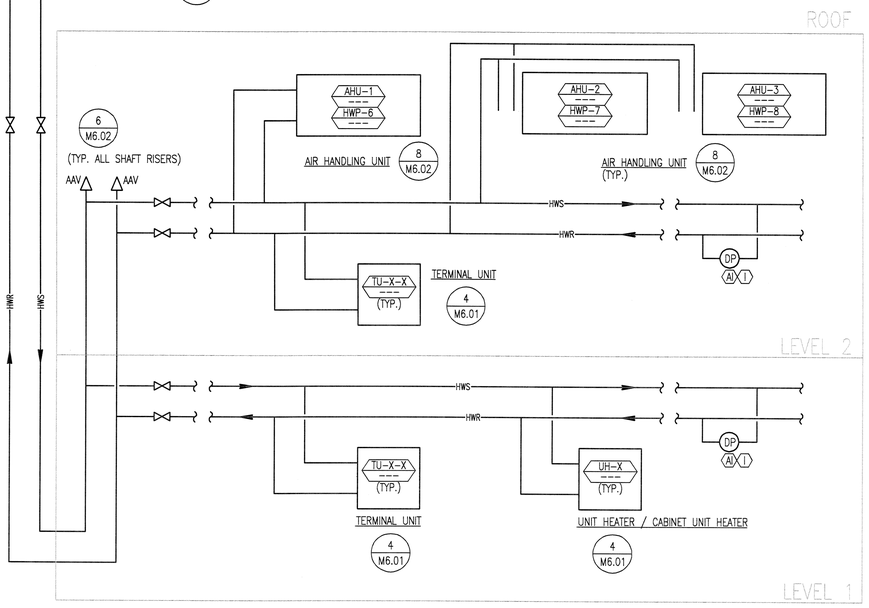

1 M4.01 HEATING WATER DIAGRAM (B-1,2,3, HWP-1,2,3,4,5)

SCALE: NONE

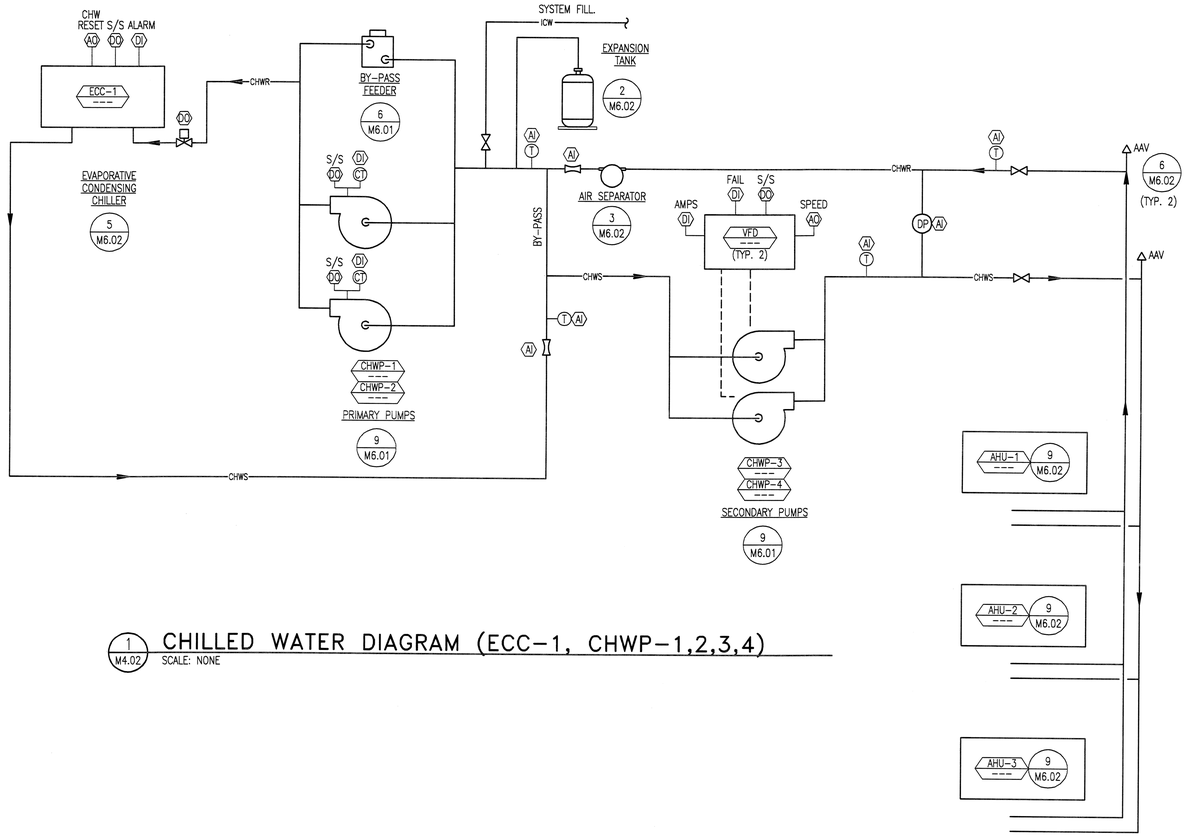

1 M4.02 CHILLED WATER DIAGRAM (ECC-1, CHWP-1,2,3,4)

SCALE: NONE

WATER CONTROL DIAGRAMS
MECHANICAL

PCC ROCK CREEK CAMPUS
NEW BUILDING

PORTLAND COMMUNITY COLLEGE
ROCK CREEK CAMPUS
17705 NW Springville Road
PORTLAND, OREGON 97229

THOMAS HACKER ARCHITECTS INC
733 SW OAK STREET
PORTLAND, OREGON 97205
(503) 227-1254

PAE CONSULTING ENGINEERS
808 SW THIRD AVENUE
PORTLAND, OREGON 97204
(503) 226-2521

REGISTERED PROFESSIONAL ENGINEER
OREGON
JULY 26, 1996
STEVEN J. REIDY
EXPIRES 12-31-04

REVISIONS :

DRAWN BY : RRK
JOB NO. : 0115

DATE : 02/14/03
SCALE : NONE

DWG. NO. M4.01

THOMAS HACKER
ARCHITECTS INC.

16:02 03/19/03 0080900 8090401.dwg xS120RGJR-S120RGRP o:IB809X Daview [XES8825F XES8825F.pc3 XES8825F.ctb]

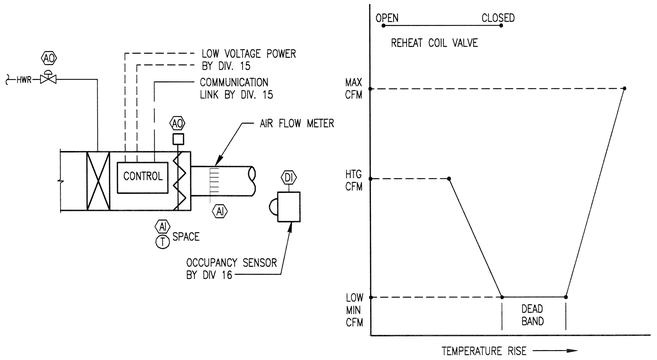

1 M5.01 TYPICAL GROUP STUDY ROOM, CONFERENCE ROOM & CLASSROOM VAV REHEAT TERMINAL CONTROL DIAGRAM (TU-X-XX)

SCALE: NONE

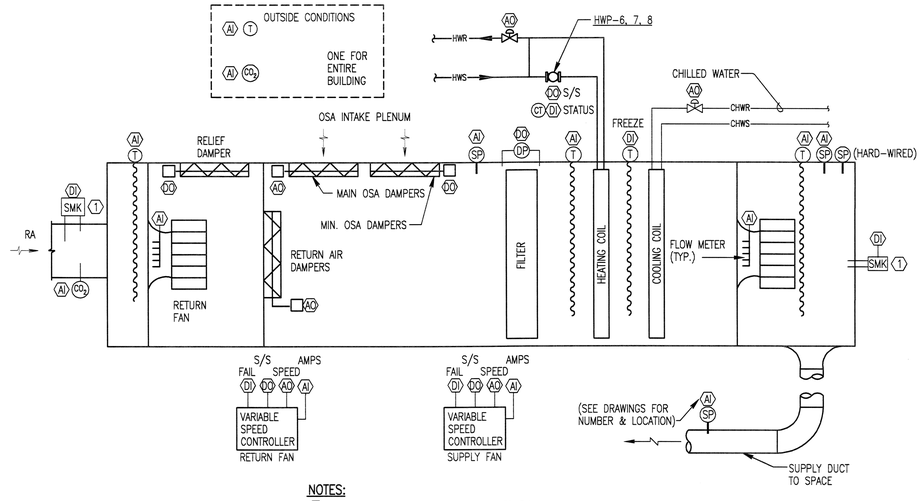

NOTES:

1. SMOKE DETECTOR FURNISHED AND WIRED BY DIV 16, INSTALLED BY DIV 15.

2 M5.01 AIR HANDLING UNIT CONTROL DIAGRAM (AHU-1,2,3)

SCALE: NONE

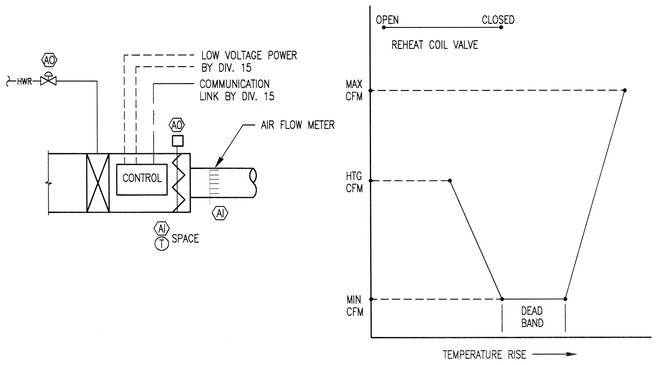

3 M5.01 TYPICAL VAV REHEAT TERMINAL CONTROL DIAGRAM (TU-X-XX)

SCALE: NONE

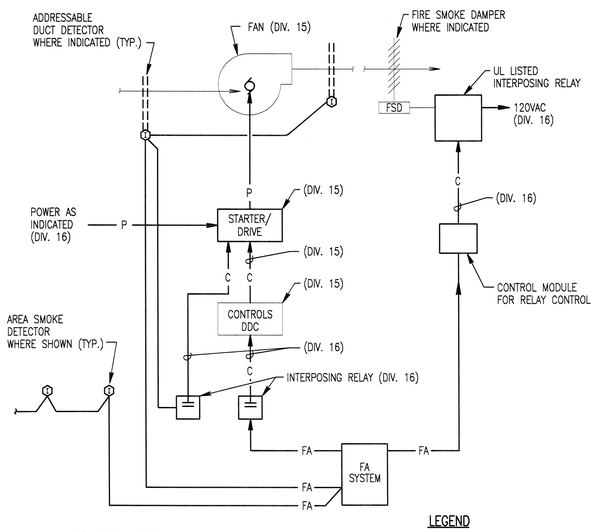

GENERAL NOTES:

1. SEE SEQUENCE OF OPERATION FOR RELAYS 1, 2 & 3 OPERATION.

LEGEND

FA – SUPERVISED FA CIRCUIT
C – CONTROL WIRING
P – POWER WIRING

4 M5.01 FSD CONTROL DIAGRAM

SCALE: NONE

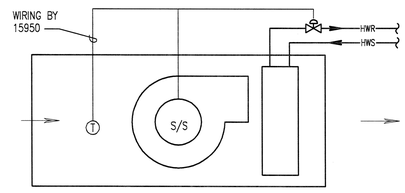

NOTES:

1. REFER TO DRAWINGS FOR UNITS WITH WALL MOUNTED THERMOSTATS

5 M5.01 UNIT HEATERS & CABINET UNIT HEATERS (LINE VOLTAGE CONTROLS) (CUH-1,2)

SCALE: NONE

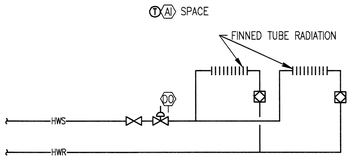

6 M5.01 FINNED TUBE RADIATION (FTR-X)

SCALE: NONE

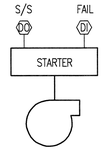

7 M5.1.1 DOMESTIC HOT WATER RECIRCULATING PUMP

SCALE: NONE

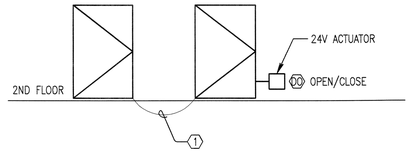

NOTES:

1. PROVIDE CONTROL WIRING TO EACH OPERABLE WINDOW ACTUATOR IN SECOND FLOOR READING AREA (TYP. 4).

8 M5.01 NATURAL VENTILATION CONTROL

SCALE: NONE

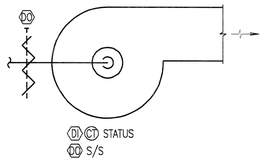

9 M5.01 EXHAUST FAN CONTROL (EF-1, EF-2)

SCALE: NONE

CONTROL DIAGRAMS – MECHANICAL

PCC ROCK CREEK CAMPUS
NEW BUILDING

PORTLAND COMMUNITY COLLEGE
ROCK CREEK CAMPUS
17705 NW Springville Road
PORTLAND, OREGON 97229

THOMAS HACKER ARCHITECTS INC
733 SW OAK STREET
PORTLAND, OREGON 97205
(503) 227-1254

PAE CONSULTING ENGINEERS
808 SW THIRD AVENUE
PORTLAND, OREGON 97204
(503) 226-2921

REGISTERED PROFESSIONAL ENGINEER 14640 OREGON JULY 26, 1982 STEVEN J. REIDY
EXPIRES 12-31-04

REVISIONS : 1 03/21/03

DRAWN BY : RRK
JOB NO. : 0115

DATE : 02/14/03
SCALE : NONE

DWG. NO. M5.01

THOMAS HACKER ARCHITECTS INC.

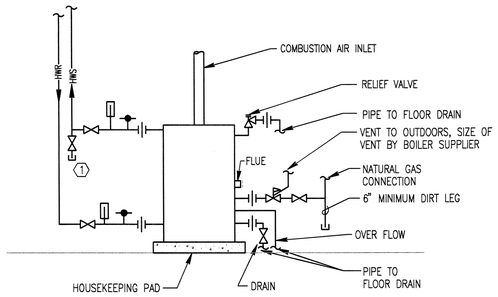

NOTES:

1. HOSE CONNECTION FOR INITIAL BOILER HEATER CALIBRATION DURING START-UP.
2. PROVIDE BOILER AND VENT CONDENSATE DRAINS PER MFRS RECOMMENDATION.

1 / M6.01 BOILER PIPING

SCALE: NONE

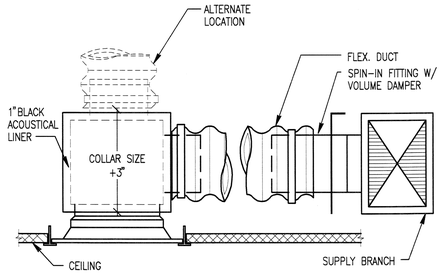

2 / M6.01 TYPICAL SQUARE NECK T-BAR DIFFUSER

SCALE: NONE

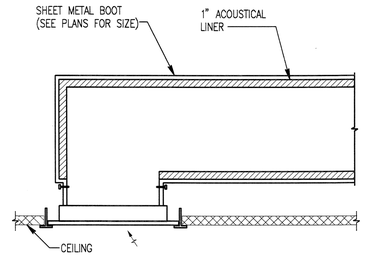

3 / M6.01 RETURN AIR BOOT

SCALE: NONE

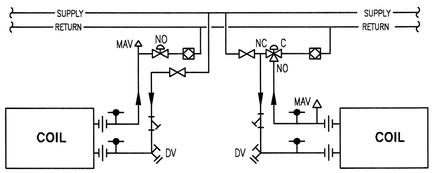

2-WAY VALVE

TYPICAL EXCEPT WHERE NOTED

3-WAY VALVE

USE ONLY WHERE NOTED

NOTES:

1. TYPICAL OF REHEAT COILS, UNIT HEATERS AND CABINET UNIT HEATERS.

4 / M6.01 HEATING COIL PIPING DETAIL

SCALE: NONE

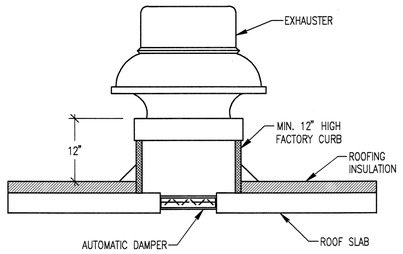

5 / M6.01 ROOF EXHAUSTER

SCALE: NONE

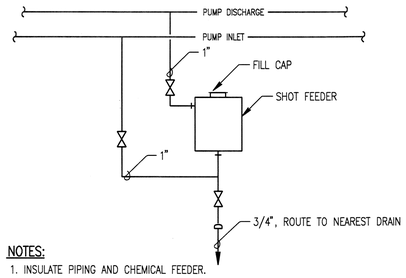

NOTES:

1. INSULATE PIPING AND CHEMICAL FEEDER.

6 / M6.01 BY-PASS/CHEMICAL FEEDER

SCALE: NONE

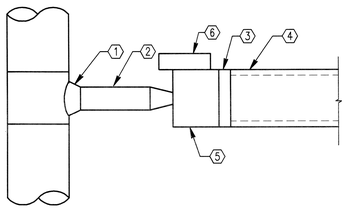

NOTES:

1. CONICAL TEE
2. INLET DUCT. MINIMUM LENGTH = 3'-0". IF UNDER 10'-0" IN LENGTH, DUCT SIZE TO BE SAME SIZE AS TERMINAL UNIT INLET. IF LENGTH IS 10'-0" OR OVER, DUCT SIZE TO BE AS SHOWN ON PLAN.
3. HEATING COIL WHERE INDICATED
4. DISCHARGE DUCT MINIMUM 5'-0" LONG BEFORE FIRST BRANCH TAKEOFF, SAME SIZE AS TERMINAL UNIT OUTLET, OR AS SHOWN ON PLAN, WHICHEVER IS LARGER. PROVIDE SOUND TRAP IF INDICATED. REFERENCE SECTION 15250 FOR DUCTLINER REQUIREMENTS.
5. TERMINAL UNIT
6. CONTROL ENCLOSURE. PROVIDE 36" CLEARANCE DIRECTLY IN FRONT OF ENCLOSURE, MOUNT CONTROLS AND PIPING CONNECTIONS ON SAME SIDE OF UNIT.

7 / M6.01 TYPICAL TERMINAL UNIT

SCALE: NONE

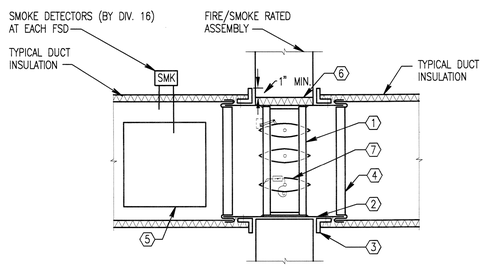

NOTES:

1. COMBINATION FIRE AND SMOKE DAMPER (VERTICAL RETURN/EXHAUST TYPE SHOWN, HORIZONTAL & SUPPLY SIMILAR).
2. GALVANIZED STEEL SLEEVE-GUAGE NOT LESS THAN CONNECTION DUCT. FASTEN TO DAMPER FRAME AND PERIMETER ANGLES. CAULK BETWEEN DAMPER FRAME & SLEEVE.
3. PERIMETER ANGLES-14 GA. GALVANIZED STEEL, 1-1/2" x 1-1/2" MIN. TO PROVIDE 1" MIN. OVERLAP OF OPENING ON ALL 4 SIDES. DO NOT FASTEN TO PARTITION.
4. AIR TIGHT, BREAKAWAY DUCT CONNECTION.
5. ACCESS PANEL-SIZE & LOCATION TO PERMIT SERVICING FUSIBLE ROD AND LINK.
6. PROVIDE 15/16" TO 1/2" CLEARANCE ON HEIGHT & WIDTH, OR AS SPECIFIED BY DAMPER MANUFACTURER. FILL OPENING WITH FIRESTOP MATERIAL.
7. INSTALL TO MANUFACTURER'S RECOMMENDATIONS.

8 / M6.01 COMBINATION FIRE/SMOKE DAMPER

SCALE: NONE

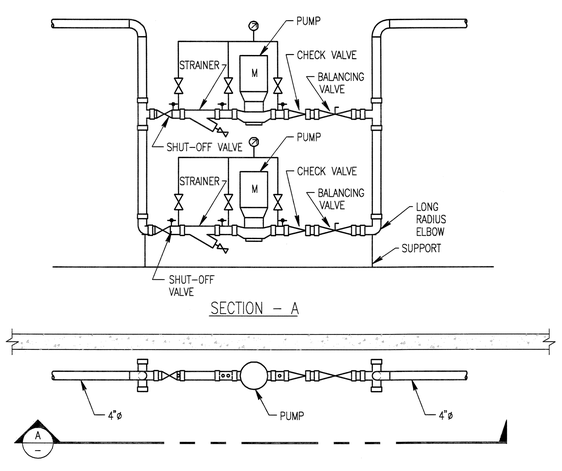

9 / M6.01 HYDRONIC PUMP PIPING

SCALE: NONE

DETAILS - MECHANICAL

PCC ROCK CREEK CAMPUS
NEW BUILDING

PORTLAND COMMUNITY COLLEGE
ROCK CREEK CAMPUS
17705 NW Springville Road
PORTLAND, OREGON 97229

THOMAS HACKER ARCHITECTS INC
733 SW OAK STREET
PORTLAND, OREGON 97205
(503) 227-1254

PAE CONSULTING ENGINEERS
806 SW THIRD AVENUE
PORTLAND, OREGON 97204
(503) 226-2921

REGISTERED PROFESSIONAL ENGINEER 16540 OREGON JULY 28, 1987 STEVEN J. REIDY

EXPIRES 12-31-04

REVISIONS : 1 03/21/03

DRAWN BY : RRK

JOB NO. : 0115

DATE : 02/14/03

SCALE : NONE

DWG. NO. M6.01

THOMAS HACKER ARCHITECTS INC.

16:02 03/19/03 0080900 R03M601.dwg x:\720RCSR\S720RCSR0 o:IT8909X Dwview [XES9825F XES9825F.pc3 XES9825F.dlt]

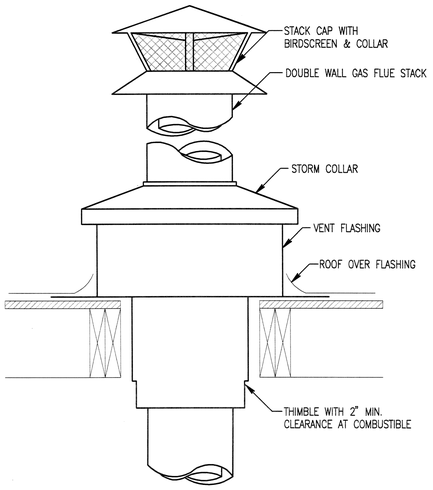

1 / M6.02 BOILER STACK DETAIL
SCALE: NONE

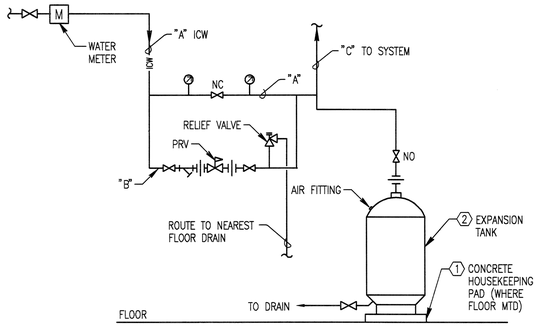

TAG	SERVICE	"A" ICW SIZE	"B" PRV VALVE SIZE	FILL PRESSURE	RELIEF VALVE SETTING	"C" TO SYSTEM	TANK SIZE	
							TANK VOLUME	ACCEPTANCE VOLUME
ET-1	HW	1"	1"	25 PSI	75 PSI	1"	150	150
ET-2	CHW	1"	1"	25 PSI	75 PSI	1"	125	125

NOTES:
1. SEE SPECIFICATIONS FOR SEISMIC RESTRAINT REQUIREMENTS.
2. VERTICAL FLOOR MTD OR HORIZONTAL SUSPENDED FROM STRUCTURE AS INDICATED ON THE DRAWING.

2 / M6.02 EXPANSION TANK CONNECTION
SCALE: NONE

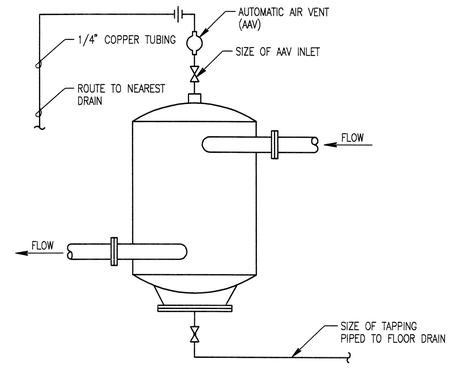

3 / M6.02 AIR SEPARATOR
SCALE: NONE

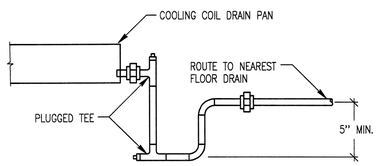

NOTES:
1. DRAIN SIZE IS OUTLET SIZE UNLESS SHOWN LARGER.

4 / M6.02 COIL DRAIN PIPING
SCALE: NONE

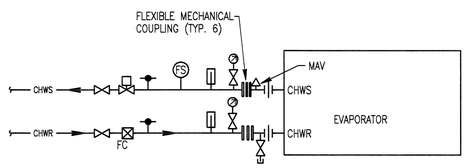

GENERAL NOTES:
1. INSTALL ALL PIPING TO ALLOW SERVICING AND REPAIR ACCESS. INCLUDE A UNION OR VICTAULIC TYPE COUPLING IN PIPING AT A LOCATION IN EACH PIPE THAT ALLOWS PIPES TO BE EASILY REMOVED FOR TUBE BUNDLE MAINTENANCE.
2. VIBRATION ISOLATION AND SEISMEC RESTRAINT PER SECTION 15240.

5 / M6.02 CHILLER PIPING CONNECTIONS
SCALE: NONE

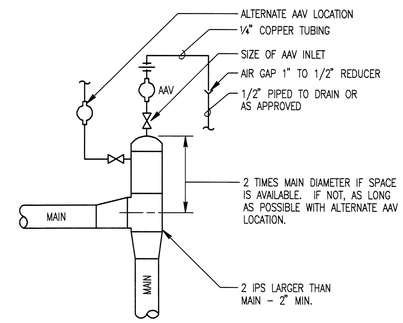

6 / M6.02 AUTOMATIC AIR VENT
SCALE: NONE

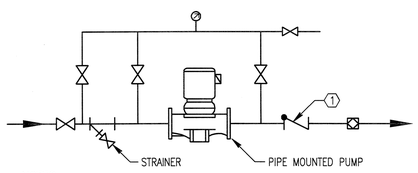

NOTES:
1. PROVIDE CHECK VALVE ONLY FOR PUMPS INSTALLED IN PARALLEL.
2. SUPPORT PUMP FROM PIPING.

7 / M6.02 PIPE MOUNTED PUMP
SCALE: NONE

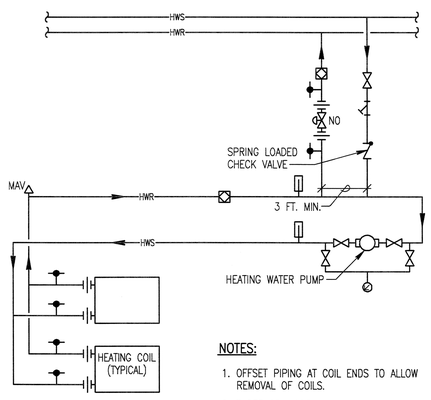

NOTES:
1. OFFSET PIPING AT COIL ENDS TO ALLOW REMOVAL OF COILS.
2. THREE OR MORE COILS PIPED SIMILAR.

8 / M6.02 AHU HEATING COIL PIPING
SCALE: NONE

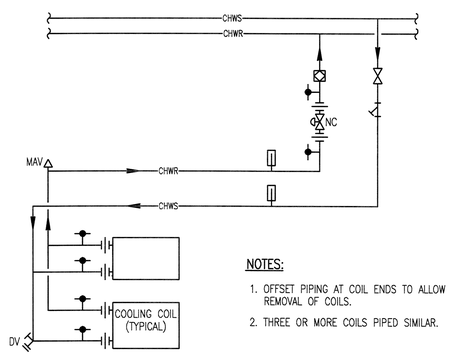

NOTES:
1. OFFSET PIPING AT COIL ENDS TO ALLOW REMOVAL OF COILS.
2. THREE OR MORE COILS PIPED SIMILAR.

9 / M6.02 AHU COOLING COIL PIPING
SCALE: NONE

DETAILS – MECHANICAL

PCC ROCK CREEK CAMPUS
NEW BUILDING

PORTLAND COMMUNITY COLLEGE
ROCK CREEK CAMPUS
17705 NW Springville Road
PORTLAND, OREGON 97229

THOMAS HACKER ARCHITECTS INC
735 SW OAK STREET
PORTLAND, OREGON 97205
(503) 227-1254

PAE CONSULTING ENGINEERS
808 SW THIRD AVENUE
PORTLAND, OREGON 97204
(503) 226-2521

REGISTERED PROFESSIONAL ENGINEER 14340 OREGON JULY 26, 1988 STEVEN J. REIDY
EXPIRES 12-31-04

REVISIONS :

DRAWN BY : RRK
JOB NO. : 0115
DATE : 02/14/03
SCALE : NONE
DWG. NO. M6.02

THOMAS HACKER ARCHITECTS INC.

PLUMBING DESIGN CRITERIA

DOMESTIC WATER PIPING SYSTEM
BASIS OF DESIGN: 2000 OREGON STATE PLUMBING SPECIALTY CODE APPENDIX A "SIZING WATER SYSTEMS". PIPING SIZED ON 3.5 PSI/100 FT. DROP, NOT TO EXCEED 8 FT./SEC. VELOCITY.

WASTE AND VENT PIPING SYSTEM
BASIS OF DESIGN: 2000 OREGON STATE PLUMBING SPECIALTY CODE, CHAPTER 7 "SANITARY DRAINAGE". ALL WASTE PIPING SIZED AT 1/4"/FT. UNLESS OTHERWISE NOTED.

ROOF DRAIN/STORM DRAIN PIPING SYSTEMS
BASIS OF DESIGN: 2000 OREGON STATE PLUMBING SPECIALTY CODE, CHAPTER 11 "STORM AND GROUNDWATER DRAINAGE." STORM DRAIN SYSTEM SIZED AT 3"/HR RAINFALL AND 1/4"/FT SLOPE UNLESS OTHERWISE INDICATED ON DRAWINGS.

NATURAL GAS SYSTEM
BASIS OF DESIGN: 1999 OREGON STATE MECHANICAL SPECIALTY CODE, CHAPTER 13, "FUEL-GAS PIPING". EQUIVALENT LENGTH OF PIPE: 100 FT (G)

PLUMBING FIXTURE SCHEDULE

SYMBOL	DESCRIPTION	ROUGH-IN SIZE-INCHES				REMARKS
		W	V	CW	HW	
WC-1	WATER CLOSET	4	2	1½	–	WALL HUNG
WC-2	WATER CLOSET	4	2	1½	–	WALL HUNG, ADA,
U-1	URINAL	2	1½	¾	–	WALL HUNG, ADA,
L-1	LAVATORY	2	1½	½	½	WALL HUNG, ADA
S-1	SINK	2	1½	½	½	25" x 22"x 6½", SINGLE COMPARTMENT, S.S., ADA GARBAGE DISPOSAL, INSTA-HOT
S-2	SINK	2	1½	½	½	17" x 17" x 12", SINGLE COMPARTMENT, S.S. GARBAGE DISPOSAL
S-3	HAND SINK	2	1½	½	½	15"x15"x6½", SINGLE COMP., S.S.
MS-1	MOP SINK	3	1½	½	½	FLOOR, CORNER
DF-1	DRINKING FOUNTAIN	2	1½	½	–	DUAL HEIGHT, ADA

PLUMBING EQUIPMENT SCHEDULE

ITEM	DESCRIPTION	ELECTRICAL
GWH-1	GAS WATER HEATER 150 CFH INPUT 100 GALLON STORAGE, 214 GPH RECOVERY @ 80°F RISE BASED ON: A.O. SMITH MODEL: BTH-150	3.0 FLA 120 V 1 PH
DET-1	DOMESTIC WATER EXPANSION TANK 2.4 GALLONS ACCEPTANCE VOLUME 4.7 GALLONS TANK VOLUME BASED ON: AMTROL AST-12-C	–
RHWP-1	RECIRCULATING HOT WATER PUMP 1 GPM AT 9 FEET HEAD BASED ON: GRUNDFOS UPS-15-42	1/25 HP 120 V 1 PH
RPBP-1 & RPBP-2 (HVAC MAKE-UP)	REDUCED PRESSURE BACKFLOW PREVENTOR 8 GPM @ 10 PSI MAX WATER PRESSURE DROP BASED ON: WATTS 909 (1")	–
GPRV-1 (GWH-1)	GAS PRESSURE REGULATOR VALVE 150 CFH, 2 PSI INLET, INCHES OUTLET TO BE COMPATIBLE WITH GAS WATER HEATER BASED ON: EQUIMETER 043	–
GPRV-2 (B-1)	GAS PRESSURE REGULATOR VALVE 1000 CFH, 2 PSI INLET, INCHES OUTLET TO BE COMPATIBLE WITH BOILER BASED ON: ROCKWELL	–
GPRV-3 (B-2)	GAS PRESSURE REGULATOR VALVE 1000 CFH, 2 PSI INLET, INCHES OUTLET TO BE COMPATIBLE WITH BOILER BASED ON: ROCKWELL	–
GPRV-4 (B-3)	GAS PRESSURE REGULATOR VALVE 1000 CFH, 2 PSI INLET, INCHES OUTLET TO BE COMPATIBLE WITH BOILER BASED ON: ROCKWELL	–
SP-1 & SP-2	ELEVATOR SUMP PUMP 10 GPM @ 24 FT HEAD BASED ON: PACO PIP701A	½ HP 120 V 1 PH

MISC. VALVES & COCKS

- SHUT-OFF VALVE
- GLOBE VALVE
- S — SHUT-OFF VALVE W/ TAMPER SWITCH
- CHECK VALVE
- BALANCING VALVE
- PRESSURE REDUCING VALVE
- RELIEF VALVE
- STRAINER
- DV — DRAIN VALVE
- HB — HOSE BIBB
- WH — WALL HYDRANT
- PRESSURE GAUGE
- THERMOMETER
- F — FLOW SWITCH
- S (SIZE) — SHOCK ARRESTOR
- V — VACUUM BREAKER
- RPBP — REDUCED PRESSURE BACKFLOW PREVENTER
- OUTSIDE SCREW & YOKE

FIRE PROTECTION SYMBOLS

- F — FIRE PROTECTION
- SPR — FIRE SPRINKLER
- ANFZ — ANTI-FREEZE FIRE SPRINKLER
- FDC — FIRE DEPARTMENT CONNECTION
- UPRIGHT SPRINKLER HEAD
- PENDANT SPRINKLER HEAD
- SIDEWALL SPRINKLER HEAD
- F — FLOW SWITCH
- S — SUPERVISED SHUT-OFF VALVE
- FIRE PROTECTION SYSTEM ZONE BOUNDARY

PLUMBING SYMBOLS

- TB — THRUST BLOCK
- CO — CLEANOUT
- WCO — WALL CLEANOUT
- FCO — FLOOR CLEANOUT
- CTG — CLEANOUT TO GRADE
- FD — FLOOR DRAIN
- AD — AREA DRAIN
- CB — CATCH BASIN
- FS — FLOOR SINK
- RD — ROOF DRAIN
- OD — OVERFLOW DRAIN
- DOWNSPOUT NOZZLE
- TD — TRENCH DRAIN
- MH — MANHOLE (INVERTS IN & OUT)
- I.E.____ I.E.____

PLUMBING PIPING

W	W	WASTE (ABOVE GRADE OR FLOOR)
W	W	WASTE (BELOW GRADE OR FLOOR)
PW	PW	PUMPED WASTE (ABOVE GRADE OR FLOOR)
PW	PW	PUMPED WASTE (BELOW GRADE OR FLOOR)
SD	SD	STORM DRAIN (ABOVE GRADE OR FLOOR)
SD	SD	STORM DRAIN (BELOW GRADE OR FLOOR)
OD	OD	OVERFLOW DRAIN (ABOVE GRADE OR FLOOR)
OD	OD	OVERFLOW DRAIN (BELOW GRADE OR FLOOR)
D	D	DRAIN (CONDENSATE/INDIRECT)
	V	VENT
	CW	COLD WATER
	HW	HOT WATER
	RHW	RECIRCULATING HOT WATER
ICW	ICW	INDUSTRIAL COLD WATER
G	G	NATURAL GAS (2 PSI)
GV	GV	GAS VENT

MISC. FITTINGS & SYMBOLS

- DIRECTION OF FLOW
- DIRECTION OF SLOPE
- PIPE SLEEVE
- REDUCER
- ANCHOR
- ELBOW (90°)
- ELBOW (45°)
- TEE
- CROSS
- JOINT OR COUPLING POINT
- UNION
- FLANGED CONNECTION
- CAP
- PLUG OR BLIND FLANGE
- RISER
- ELBOW UP
- ELBOW DOWN
- TEE UP
- TEE DOWN
- HORIZONTAL TEE
- FLEXIBLE CONNECTION
- BALL JOINT
- MC — MECHANICAL COUPLING

LEGENDS, SYMBOLS AND ABBREVIATIONS – ELECTRICAL

PCC ROCK CREEK CAMPUS
NEW BUILDING

PORTLAND COMMUNITY COLLEGE
ROCK CREEK CAMPUS
17705 NW Springville Road
PORTLAND, OREGON 97229

THOMAS HACKER ARCHITECTS INC
733 SW OAK STREET
PORTLAND, OREGON 97205
(503) 227-1254

PAE CONSULTING ENGINEERS
808 SW THIRD AVENUE
PORTLAND, OREGON 97204
(503) 226-2521

REGISTERED PROFESSIONAL ENGINEER 14,640 OREGON JULY 28, 1989 STEVEN J. REDDY
EXPIRES 12-31-04

REVISIONS : 1 3/21/03

DRAWN BY : EMW
JOB NO. : 0115

DATE : 02/14/03
SCALE : NONE

DWG. NO. P0.01

THOMAS HACKER ARCHITECTS INC.

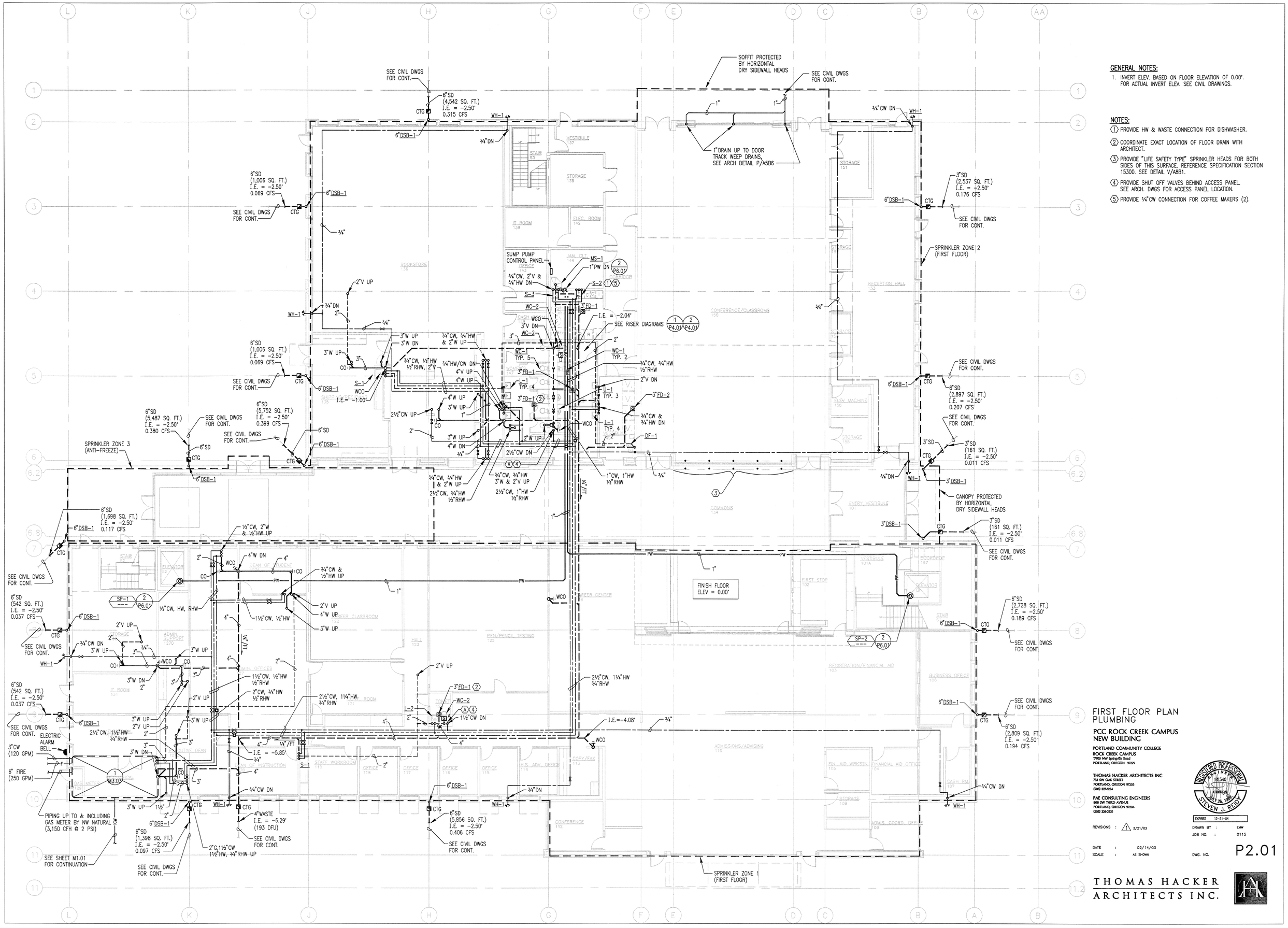

GENERAL NOTES:

1. INVERT ELEV. BASED ON FLOOR ELEVATION OF 0.00'. FOR ACTUAL INVERT ELEV. SEE CIVIL DRAWINGS.

NOTES:

1. PROVIDE HW & WASTE CONNECTION FOR DISHWASHER.
2. COORDINATE EXACT LOCATION OF FLOOR DRAIN WITH ARCHITECT.
3. PROVIDE "LIFE SAFETY TYPE" SPRINKLER HEADS FOR BOTH SIDES OF THIS SURFACE. REFERENCE SPECIFICATION SECTION 15300. SEE DETAIL V/A8B1.
4. PROVIDE SHUT OFF VALVES BEHIND ACCESS PANEL. SEE ARCH. DWGS FOR ACCESS PANEL LOCATION.
5. PROVIDE 1/4"CW CONNECTION FOR COFFEE MAKERS (2).

FIRST FLOOR PLAN PLUMBING

PCC ROCK CREEK CAMPUS NEW BUILDING

PORTLAND COMMUNITY COLLEGE
ROCK CREEK CAMPUS
17705 NW Springville Road
PORTLAND, OREGON 97229

THOMAS HACKER ARCHITECTS INC
733 SW OAK STREET
PORTLAND, OREGON 97205
(503) 227-1254

PAE CONSULTING ENGINEERS
808 SW THIRD AVENUE
PORTLAND, OREGON 97204
(503) 228-2521

REGISTERED PROFESSIONAL ENGINEER 16,540 OREGON JULY 26, 1985 STEVEN J. REIDY
EXPIRES 12-31-04

REVISIONS : 1 3/21/03

DATE : 02/14/03
SCALE : AS SHOWN

DRAWN BY : EMW
JOB NO. : 0115
DWG. NO. P2.01

THOMAS HACKER ARCHITECTS INC.

15:40 03/19/03 G:\80900 809\P201.dwg x:\T20\CSJR\T20\CRP c:\809\T1_1\809X_2\809\1 RobinK [XE3825F XE3825F.pc3 XE3825F.ctb]

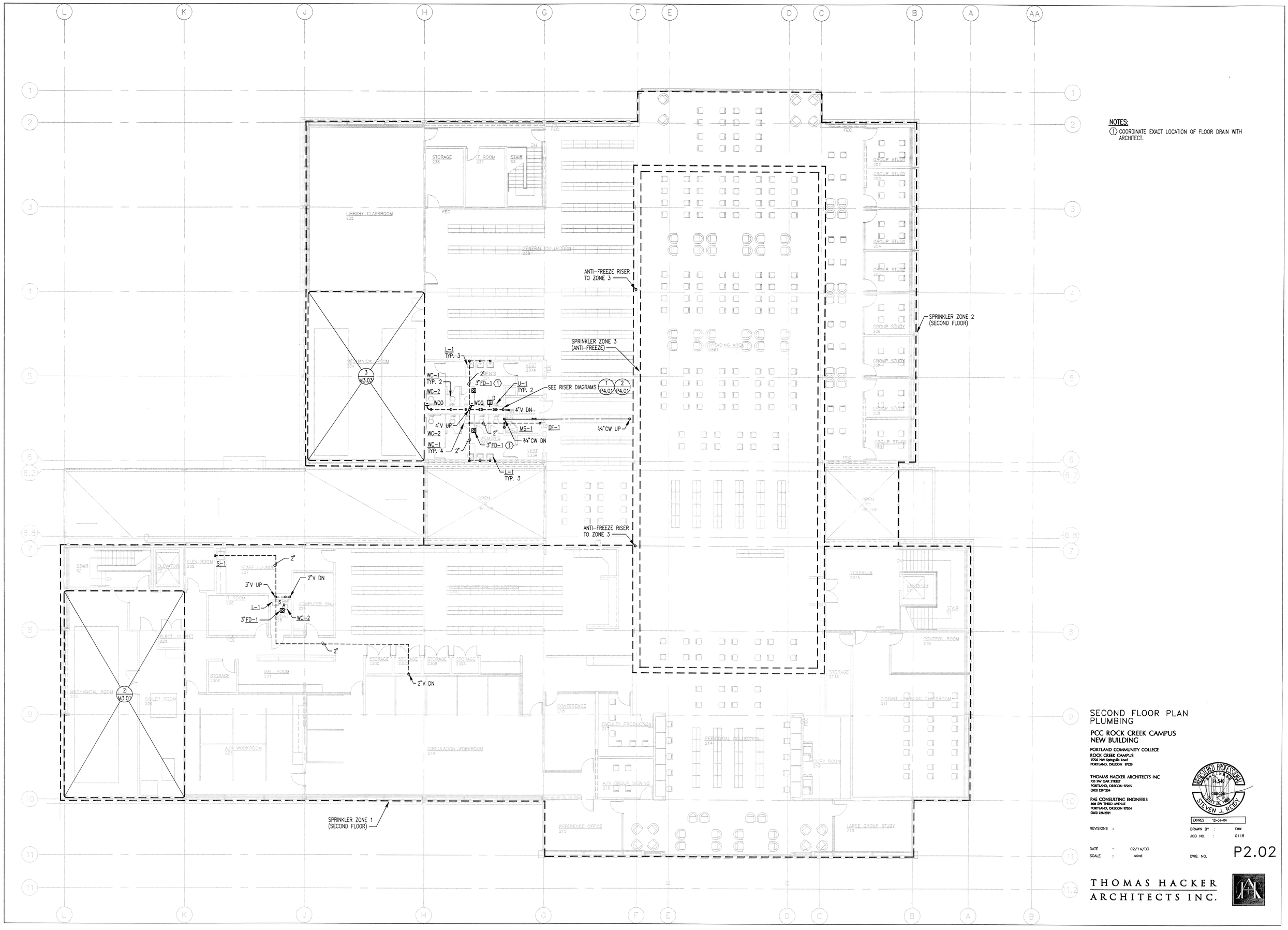

NOTES:

1. COORDINATE EXACT LOCATION OF FLOOR DRAIN WITH ARCHITECT.

SECOND FLOOR PLAN PLUMBING

PCC ROCK CREEK CAMPUS NEW BUILDING

PORTLAND COMMUNITY COLLEGE
ROCK CREEK CAMPUS
17705 NW Springville Road
PORTLAND, OREGON 97229

THOMAS HACKER ARCHITECTS INC
733 SW OAK STREET
PORTLAND, OREGON 97205
(503) 227-1254

PAE CONSULTING ENGINEERS
808 SW THIRD AVENUE
PORTLAND, OREGON 97204
(503) 226-2921

REGISTERED PROFESSIONAL ENGINEER
14,540
OREGON
JULY 26, 1989
STEVEN J. REDDY
EXPIRES 12-31-04

REVISIONS :

DRAWN BY : EMW
JOB NO. : 0115

DATE : 02/14/03
SCALE : NONE

DWG. NO. P2.02

THOMAS HACKER ARCHITECTS INC.

12:09 02/14/03 0080900 869P202.dwg x7809F2,STORCSR,STORCSR1 ocIB809X,Z809G1 1rcoFlm [XE58825F XE58825F.pc3 XE58825F.ctb]

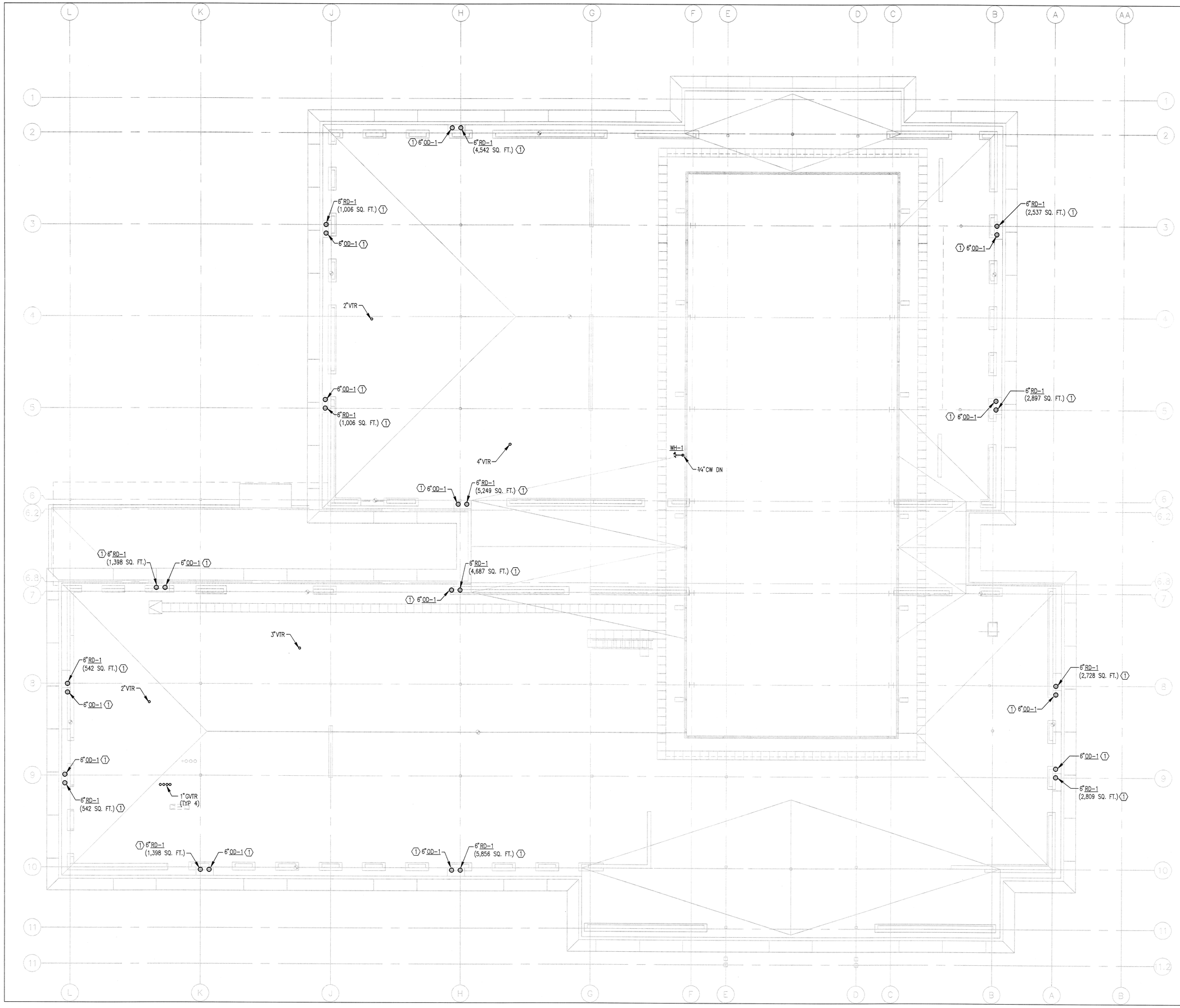

NOTES:

(1) CONNECT TO DOWNSPOUT PROVIDED BY OTHERS. REFERNCE ARCH. DRAWINGS.

ROOF PLAN PLUMBING

PCC ROCK CREEK CAMPUS NEW BUILDING

PORTLAND COMMUNITY COLLEGE
ROCK CREEK CAMPUS
17705 NW Springville Road
PORTLAND, OREGON 97229

THOMAS HACKER ARCHITECTS INC
733 SW OAK STREET
PORTLAND, OREGON 97205
(503) 227-1254

PAE CONSULTING ENGINEERS
808 SW THIRD AVENUE
PORTLAND, OREGON 97204
(503) 226-2951

REGISTERED PROFESSIONAL ENGINEER
M.E.S.D.
OREGON
JULY 26, 1988
STEVEN J. REIDY
EXPIRES 12-31-04

REVISIONS :

DRAWN BY : RRK
JOB NO. : 0115

DATE : 02/14/03
SCALE : NONE

DWG. NO. P2.03

THOMAS HACKER ARCHITECTS INC.

12:13 02/14/03 0006900 8698\203.dwg x:\3208\5a\5\203\5J1 o:1868\8\2\8698\2\8698\1 realism [X:\5825\5F XL5825F.pc3]

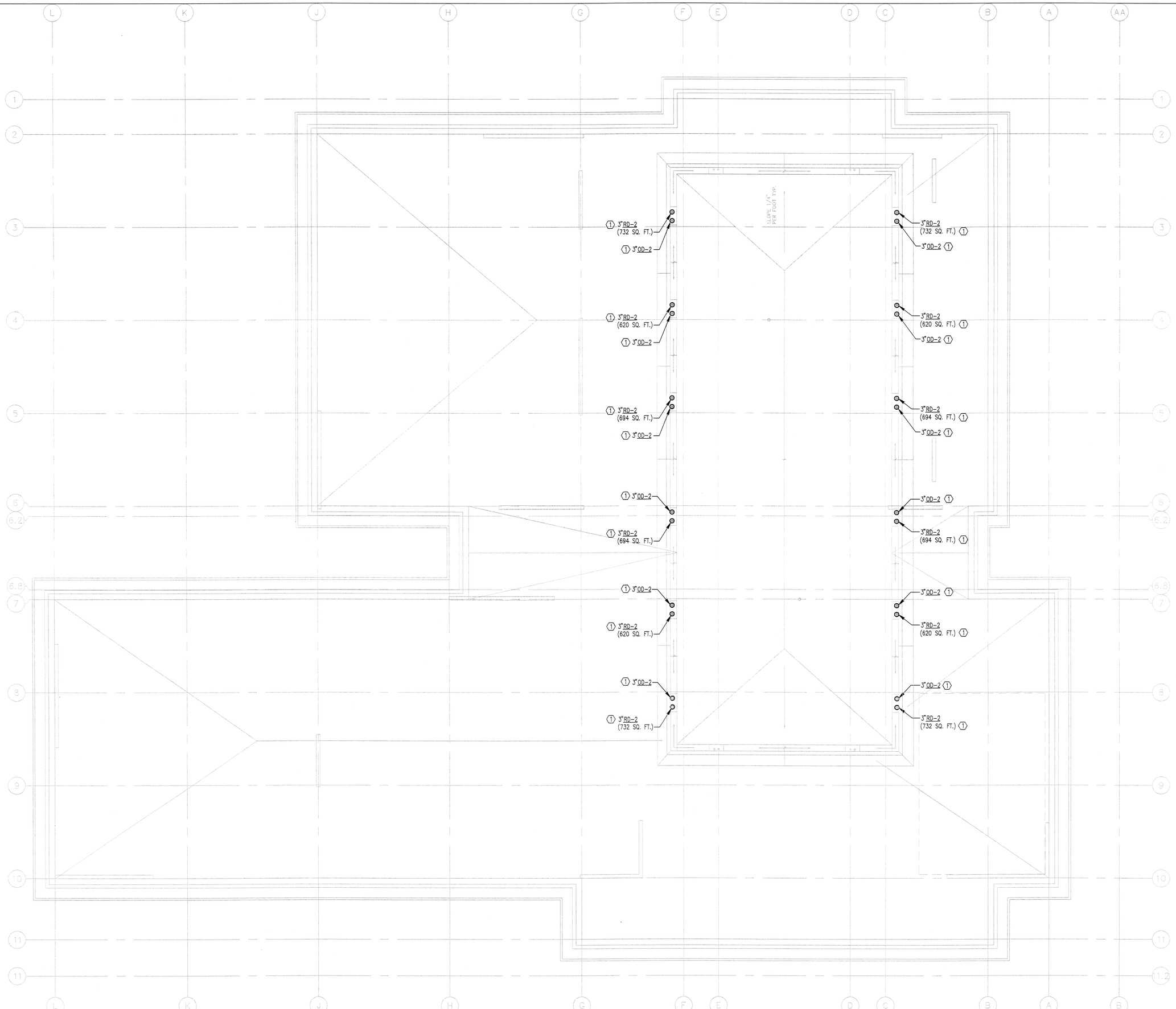

NOTES:

(1) CONNECT TO DOWNSPOUT PROVIDED BY OTHERS. REFERNCE ARCH. DRAWINGS.

MONITOR ROOF PLAN PLUMBING

PCC ROCK CREEK CAMPUS NEW BUILDING

PORTLAND COMMUNITY COLLEGE
ROCK CREEK CAMPUS
17705 NW Springville Road
PORTLAND, OREGON 97229

THOMAS HACKER ARCHITECTS INC
733 SW OAK STREET
PORTLAND, OREGON 97205
(503) 227-1254

PAE CONSULTING ENGINEERS
808 SW THIRD AVENUE
PORTLAND, OREGON 97204
(503) 226-2501

REGISTERED PROFESSIONAL ENGINEER 14540 OREGON JAN. 28, 1986 STEVEN J. REIDY

EXPIRES 12-31-04

REVISIONS :

DRAWN BY : RRK
JOB NO. : 0115

DATE : 02/14/03
SCALE : NONE

DWG. NO. P2.04

THOMAS HACKER ARCHITECTS INC.

13:45 02/14/03 0080900 809P204.dwg xZ809F4,STZ0RSJR,STZ0RSJF o:IB89X,Z809G1 Frice [XES8825F XES8825F XES8825F.pc3 XES8825F.ctb]

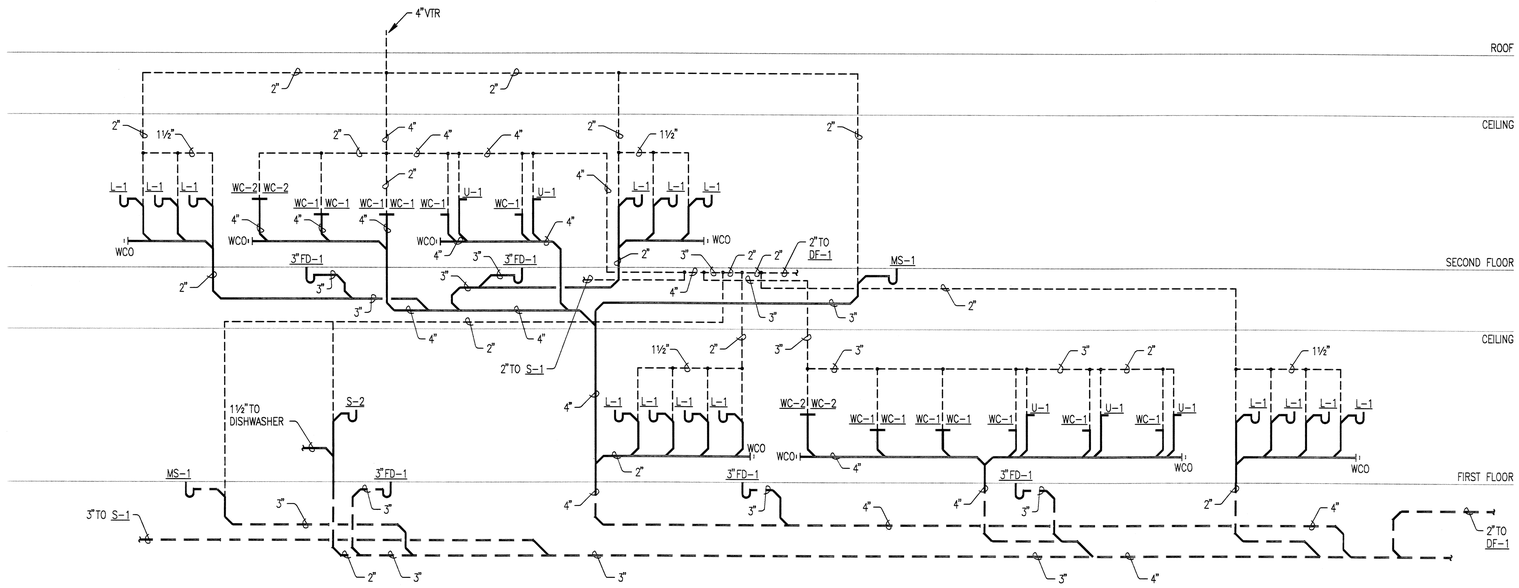

1 WASTE AND VENT RISER DIAGRAM
P4.01 SCALE: NONE

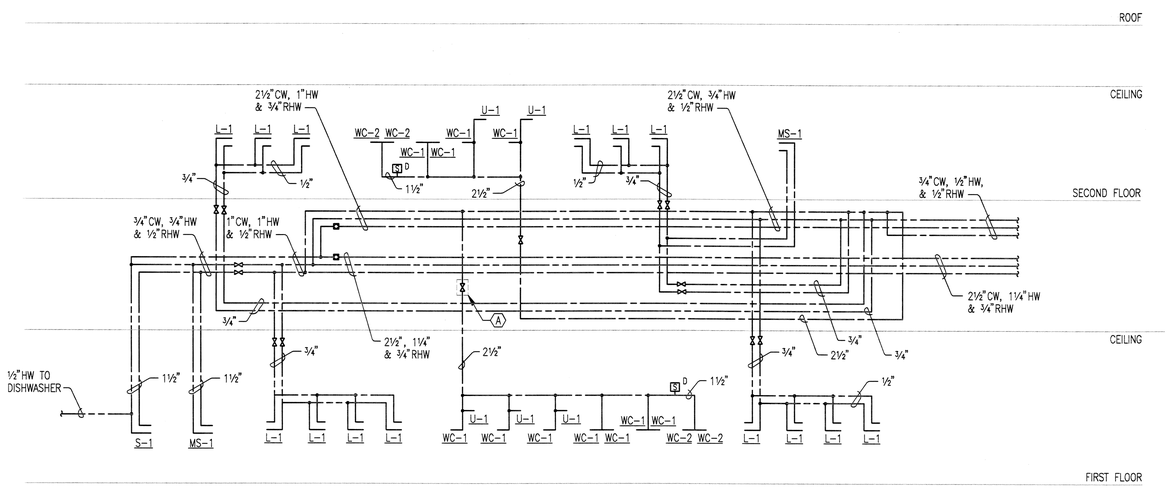

2 HOT AND COLD WATER RISER DIAGRAM
P4.01 SCALE: NONE

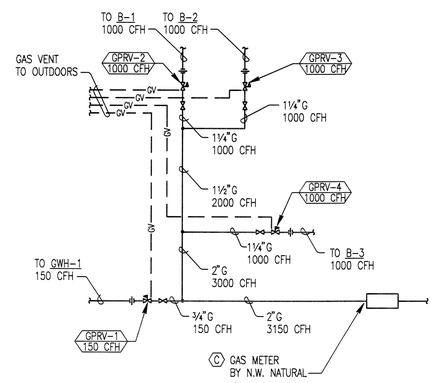

3 GAS RISER DIAGRAM
P4.01 SCALE: NONE

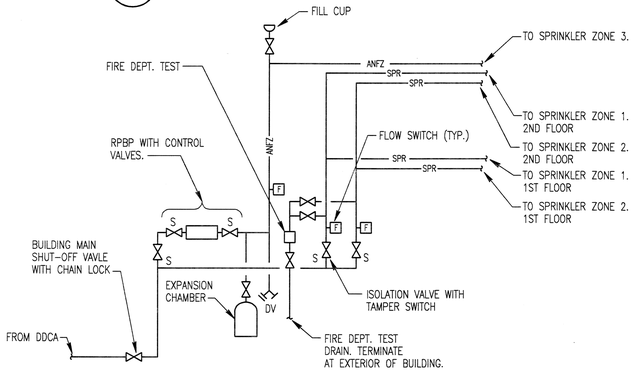

4 FIRE HEADER DETAIL
P4.01 SCALE: NONE

RISER DIAGRAMS – PLUMBING

PCC ROCK CREEK CAMPUS
NEW BUILDING

PORTLAND COMMUNITY COLLEGE
ROCK CREEK CAMPUS
17705 NW Springville Road
PORTLAND, OREGON 97229

THOMAS HACKER ARCHITECTS INC
733 SW OAK STREET
PORTLAND, OREGON 97205
(503) 227-1254

PAE CONSULTING ENGINEERS
808 SW THIRD AVENUE
PORTLAND, OREGON 97204
(503) 226-2921

REGISTERED PROFESSIONAL ENGINEER 10,540 OREGON JULY 28, 1989 STEVEN J. REIDY
EXPIRES 12-31-04

REVISIONS :

DRAWN BY : RRK
JOB NO. : 0115
DATE : 02/14/03
SCALE : NONE
DWG. NO. P4.01

THOMAS HACKER ARCHITECTS INC.

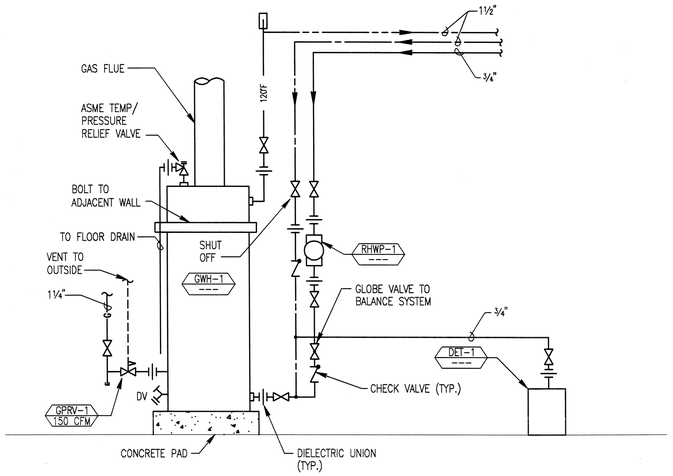

1 P6.01 GAS WATER HEATER DETAIL

SCALE: NONE

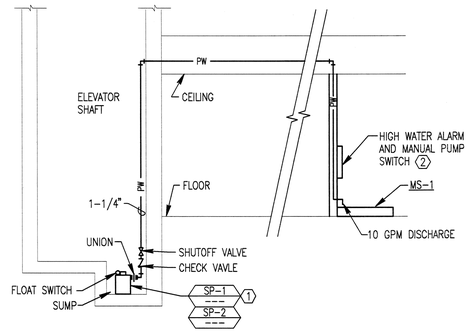

NOTES:

1. PROVIDE LOCAL DISCONNECT FOR PUMP WITHIN ELEVATOR SHAFT. SEE DIV.16 FOR REQUIREMENTS.
2. LOCATE CONTROLLER FOR SUMP PUMPS IN JANITOR'S ROOM AS INDICATED ON DRAWINGS.

2 P6.01 SUMP PUMP DETAIL

SCALE: NONE

DETAILS – PLUMBING

PCC ROCK CREEK CAMPUS
NEW BUILDING

PORTLAND COMMUNITY COLLEGE
ROCK CREEK CAMPUS
17705 NW Springville Road
PORTLAND, OREGON 97229

THOMAS HACKER ARCHITECTS INC
733 SW OAK STREET
PORTLAND, OREGON 97205
(503) 227-1254

PAE CONSULTING ENGINEERS
808 SW THIRD AVENUE
PORTLAND, OREGON 97204
(503) 220-2521

REGISTERED PROFESSIONAL ENGINEER
No. 540
OREGON
JULY 26, 1988
STEVEN J. REDDY

EXPIRES 12-31-04

REVISIONS :

DRAWN BY : RRK
JOB NO. : 0115

DATE : 02/14/03
SCALE : NONE

DWG. NO. P6.01

THOMAS HACKER
ARCHITECTS INC.

ABBREVIATIONS

AFF	ABOVE FINISHED FLOOR	KVA	KILOVOLT AMP
A	AMPERE (AMP)	KVAR	KILOVOLT AMPS REACTIVE
AL	ALUMINUM	LA	LIGHTNING ARRESTOR
ARCH	ARCHITECT / ARCHITECTURAL	LTG	LIGHTING
ATS	AUTOMATIC TRANSFER SWITCH	LV	LOW VOLTAGE
CB	CIRCUIT BREAKER	MATV	MASTER ANTENNA TELEVISION
C	CONDUIT	MCA	MINIMUM CIRCUIT AMPS
CCTV	CLOSED CIRCUIT TELEVISION	MCB	MAIN CIRCUIT BREAKER
CKT	CIRCUIT	MCC	MOTOR CONTROL CENTER
CLG	CEILING	MDP	MAIN DISTRIBUTION PANEL
CT	CURRENT TRANSFORMER	MECH	MECHANICAL
CU	COPPER	MH	METAL HALIDE
DN	DOWN	MLO	MAIN LUGS ONLY
EMERG	EMERGENCY	MV	MERCURY VAPOR
EMT	ELECTRIC METALLIC TUBING	MTS	MANUAL TRANSFER SWITCH
EP	EXPLOSION PROOF	NIC	NOT IN CONTRACT
EPO	EMERGENCY POWER OFF	NL	NIGHT LIGHT CIRCUIT
EWC	ELECTRIC WATER COOLER	PA	PUBLIC ADDRESS
FA	FIRE ALARM	PE	PHOTO ELECTRIC CELL
FLA	FULL LOAD AMPS	PF	POWER FACTOR
FLUOR	FLUORESCENT	PNL	PANELBOARD
FCIC	FURNISHED BY CONTRACTOR INSTALLED BY CONTRACTOR	PVC	POLYVINYL CHLORIDE CONDUIT
		PWR	POWER
FOIC	FURNISHED BY OWNER INSTALLED BY CONTRACTOR	SDP	SUB-DISTRIBUTION PANEL
		STR	STARTER
FOIO	FURNISHED BY OWNER INSTALLED BY OWNER	SV	SOLENOID VALVE
		SW	SWITCH
F.O.	FIBER OPTIC	TD	TIME DELAY
GFP	GROUND FAULT PROTECTION	TP	TAMPERPROOF
GFI	GROUND FAULT INTERRUPTER	TTB	TELEPHONE TERMINAL BOARD
GFCI	GROUND FAULT CIRCUIT INTERRUPTER	TTC	TELEPHONE TERMINAL CABINET
GRC	GALVANIZED RIGID CONDUIT	TV	TELEVISION
GRD	GROUND	TYP	TYPICAL
HP	HORSEPOWER	UG	UNDERGROUND
HPS	HIGH PRESSURE SODIUM	UON	UNLESS OTHERWISE NOTED
HV	HIGH VOLTAGE	UPS	UNINTERRUPTABLE POWER SUPPLY
HZ	HERTZ	V	VOLTAGE
IG	ISOLATED GROUND	VA	VOLT AMPERES
INC	INCANDESCENT	VP	VAPOR PROOF
JB	JUNCTION BOX	W	WATTS
KW	KILOWATT	WP	WEATHER PROOF
KWH	KILOWATT HOUR	XFMR	TRANSFORMER
KV	KILOVOLT	XFSW	TRANSFER SWITCH

NOTE

THIS IS A STANDARD LEGEND SHEET, THEREFORE, SOME SYMBOLS MAY APPEAR ON THIS SHEET THAT DO NOT APPEAR ON THE DRAWINGS.

LIGHTING

- CEILING LUMINAIRE: SURFACE, RECESSED
- CEILING LUMINAIRE: PENDANT MOUNTED
- WALL LUMINAIRE: SURFACE, RECESSED
- WALL WASHER: SURFACE, RECESSED
- TRACK WITH HEADS LOCATED
- FLUORESCENT LUMINAIRE: SURFACE, RECESSED
- FLUORESCENT LUMINAIRE: WALL MOUNTED, PENDANT
- FLUORESCENT LUMINAIRE: BARE LAMP
- POLE LIGHT: LUMINAIRES AS SHOWN
- DESIGNATES LIGHT ON EMERGENCY CIRCUIT
- EXIT LIGHT: CEILING, WALL (ARROWS AS SHOWN)
- BOLLARD
- EMERGENCY BATTERY LIGHT: HEADS AS SHOWN
- $ $2 — WALL SWITCH: 1 POLE, 2 POLE
- $3 $4 — WALL SWITCH: 3 WAY, 4 WAY
- $K $M — WALL SWITCH: KEY LOCK, MOMENTARY
- $LV $P — WALL SWITCH: LOW VOLTAGE, PILOT
- $T $D — WALL SWITCH: TIMER, MANUAL DIMMER
- PHOTOELECTRIC CELL, OCCUPANCY SENSOR
- A — DESIGNATES LUMINAIRE TYPE (SEE LUMINAIRE SCHEDULE)

EQUIPMENT

- ELECTRICAL EQUIPMENT
- PANELBOARD: SURFACE, RECESSED
- CABINET: SURFACE, RECESSED
- TRANSFORMER
- GROUND ROD, IN TEST WELL
- GROUND PAD
- EQUIPMENT WITH DERIVED GROUND
- V A — VOLTMETER, AMMETER
- VS AS — SELECTOR SWITCH: VOLTMETER, AMMETER
- KWH PF — METER: KILOWATT HOUR, POWER FACTOR
- PT — POTENTIAL TRANSFORMER
- CT — CURRENT TRANSFORMER
- CABLE TRAY: CENTER SUPPORT, OUTER SUPPORTS

POWER

- WALL RECEPTACLE: SINGLE, DUPLEX
- WALL RECEPTACLE: EMERGENCY, 4-PLEX
- CEILING RECEPTACLE: DUPLEX
- DENOTES RECEPTACLE ABOVE COUNTER
- SPECIAL PURPOSE OUTLET AS NOTED, EMERGENCY
- CLOCK HANGER RECEPTACLE
- FLUSH IN-FLOOR OUTLET: SEE PLANS FOR TYPE
- PEDESTAL OUTLET: POWER, SIGNAL, COMBINATION
- SURFACE OUTLET STRIP: DIMENSION AS SHOWN
- TELEPOWER POLE, POWER, COMBINATION
- JUNCTION BOX
- 60A 4SP F — DISCONNECT SWITCH: FUSED, NON-FUSED
- $OL — MOTOR STARTER: MANUAL, MAGNETIC, COMBINATION
- MOTOR CONNECTION
- C R S — CONTACTOR, RELAY, SOLENOID
- PUSH BUTTON STATION
- WIRING CONCEALED IN CEILING OR WALL
- WIRING CONCEALED IN FLOOR OR UNDERGROUND
- INDICATES INSULATED GREEN GROUND WIRE
- HOME RUN DESTINATION SHOWN
- CONDUIT ELL: UP, DN.

ONE-LINE

- CIRCUIT BREAKER
- SWITCH, FUSED SWITCH
- BUSS
- AUTOMATIC SWITCH
- METER
- XXX XX — PANEL
- FEEDER CALLOUT
- XXX — FAULT CURRENT CALLOUT

SIGNAL

- FS FS — SPRINKLER SYSTEM SWITCH: FLOW, TAMPER
- F — MANUAL FIRE ALARM STATION
- I H P — DETECTOR: IONIZATION, HEAT, PHOTOELECTRIC
- DUCT DETECTOR, TYPE AS NOTED
- F — FIRE ALARM: VISUAL
- F F — FIRE ALARM: BELL; BELL W/VISUAL
- C C — FIRE ALARM: CHIME; CHIME W/VISUAL
- F F — FIRE ALARM: HORN; HORN W/VISUAL
- F — FIREMANS PHONE JACK
- S S — SPEAKER: WALL, CEILING
- D D — MAGNETIC DOOR HOLDER, CLOSER
- ELECTRIC DOOR LOCK, CONTACT
- F F — FIRE ALARM SPEAKER: WALL, CEILING
- WALL OUTLET: DATA
- WALL OUTLET: BLANK
- WALL OUTLET: COMBINATION TELEPHONE/DATA
- M I A — WALL OUTLET: MICROPHONE, INTERCOM, AUDIO JACK
- FLUSH IN-FLOOR OUTLET: DATA
- CCTV CAMERA
- SYSTEM CLOCK: WALL, CEILING
- TV — MASTER ANTENNA TV OUTLET
- K — CARD KEY READER STATION
- SECURITY ELECTRONIC SENSOR

DESIGNATION SYMBOLS

- UNIT PANEL 123 — EQUIPMENT DESIGNATOR SEE SCHEDULE.
- E X — EXISTING TO REMAIN, EXISTING TO BE REMOVED
- R — EXISTING TO BE RELOCATED
- N F — NEW, FUTURE
- 1 — NOTE

LEGENDS, SYMBOLS AND ABBREVIATIONS – ELECTRICAL

PCC ROCK CREEK CAMPUS
NEW BUILDING

PORTLAND COMMUNITY COLLEGE
ROCK CREEK CAMPUS
17705 NW Springville Road
PORTLAND, OREGON 97229

THOMAS HACKER ARCHITECTS INC
733 SW OAK STREET
PORTLAND, OREGON 97205
(503) 227-1254

PAE CONSULTING ENGINEERS
808 SW THIRD AVENUE
PORTLAND, OREGON 97204
(503) 226-2051

REGISTERED PROFESSIONAL ENGINEER 44775 OREGON July 15, 1989 GRANT R. PARTHEMER 5/14/03

EXPIRES 12-31-04

REVISIONS :

DRAWN BY : WRD
JOB NO. : 0115

DATE : 02/14/03
SCALE : NONE

DWG. NO. E0.01

THOMAS HACKER ARCHITECTS INC.

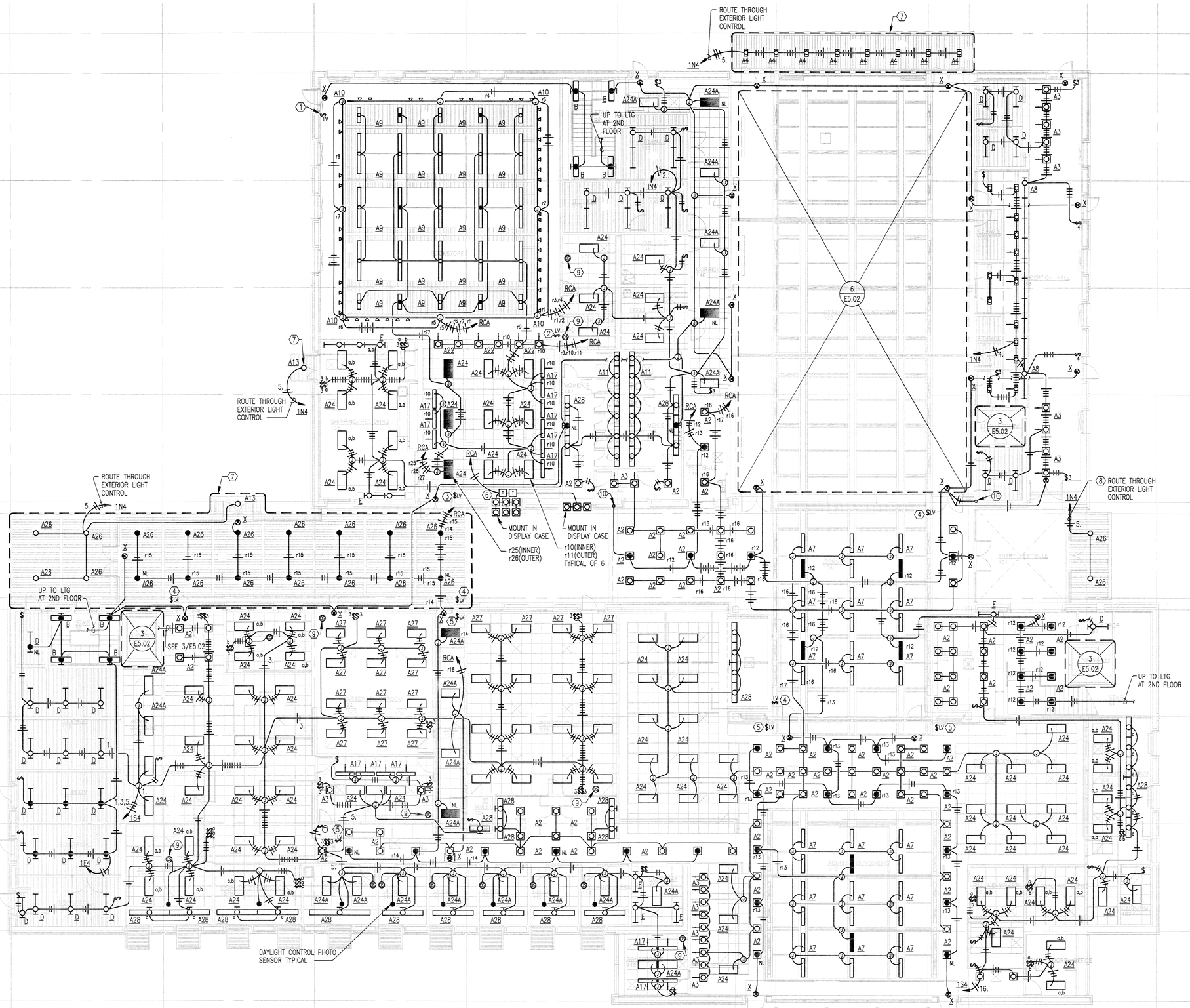

1 E2.01 FIRST FLOOR PLAN – LIGHTING

SCALE: 1/8" = 1'-0"

GENERAL NOTES:

1. PROVIDE DIMMING BALLASTS IN ALL FLUORESCENT FIXTURES LOCATED IN ROOMS WITH DAYLIGHT PHOTO SENSOR.

NOTES:

1 LOW VOLTAGE SWITCH LAYOUT:

2 LOW VOLTAGE SWITCH LAYOUT:

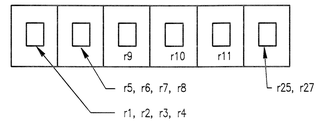

3 LOW VOLTAGE SWITCH LAYOUT:

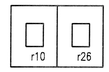

4 LOW VOLTAGE SWITCH LAYOUT:

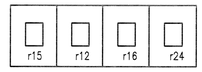

5 LOW VOLTAGE SWITCH LAYOUT:

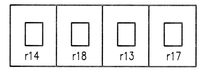

6 LOW VOLTAGE TRANSFORMERS MOUNTED ABOVE CEILING.

7 ROUTE ALL CONDUIT IN INSULATION ABOVE ROOF CANOPY.

8 ROUTE CONDUIT IN INSULATION SPACE AND INTO WALL. ABOVE WINDOW DOOR MULLION.

9 PROVIDE NOVITAS DUAL TECHNOLOGY CEILING MOUNTED OCCUPANCY SENSOR. CONNECT FOR MASTER CONTROL OF ROOM AHEAD OF ANY SWITCHING SHOWN. SEE SPECIFICATIONS.

10 ROUTE UP TO LIGHTING ON SECOND FLOOR. SEE 1/E2.02.

FIRST FLOOR PLAN LIGHTING

PCC ROCK CREEK CAMPUS NEW BUILDING

PORTLAND COMMUNITY COLLEGE
ROCK CREEK CAMPUS
17705 NW Springville Road
PORTLAND, OREGON 97229

THOMAS HACKER ARCHITECTS INC
733 SW OAK STREET
PORTLAND, OREGON 97205
(503) 227-1254

PAE CONSULTING ENGINEERS
808 SW THIRD AVENUE
PORTLAND, OREGON 97204
(503) 226-2921

REGISTERED PROFESSIONAL ENGINEER #44775 OREGON JULY 13, 1990 GRANT R. PARTHEMER 3-19-03

EXPIRES 12-31-04

REVISIONS : 1 03/21/03

DRAWN BY : WBD

JOB NO. : 0115

DATE : 02/14/03

SCALE : NONE

DWG. NO. E2.01

THOMAS HACKER ARCHITECTS INC.

15:09 03/19/03 0081200 809E201.dwg x37206SJR,SIP206GRP cc2809H11B809X,809C1,2809C1 bruced [W38825f W38825f.pc3 W38825f.ctb]

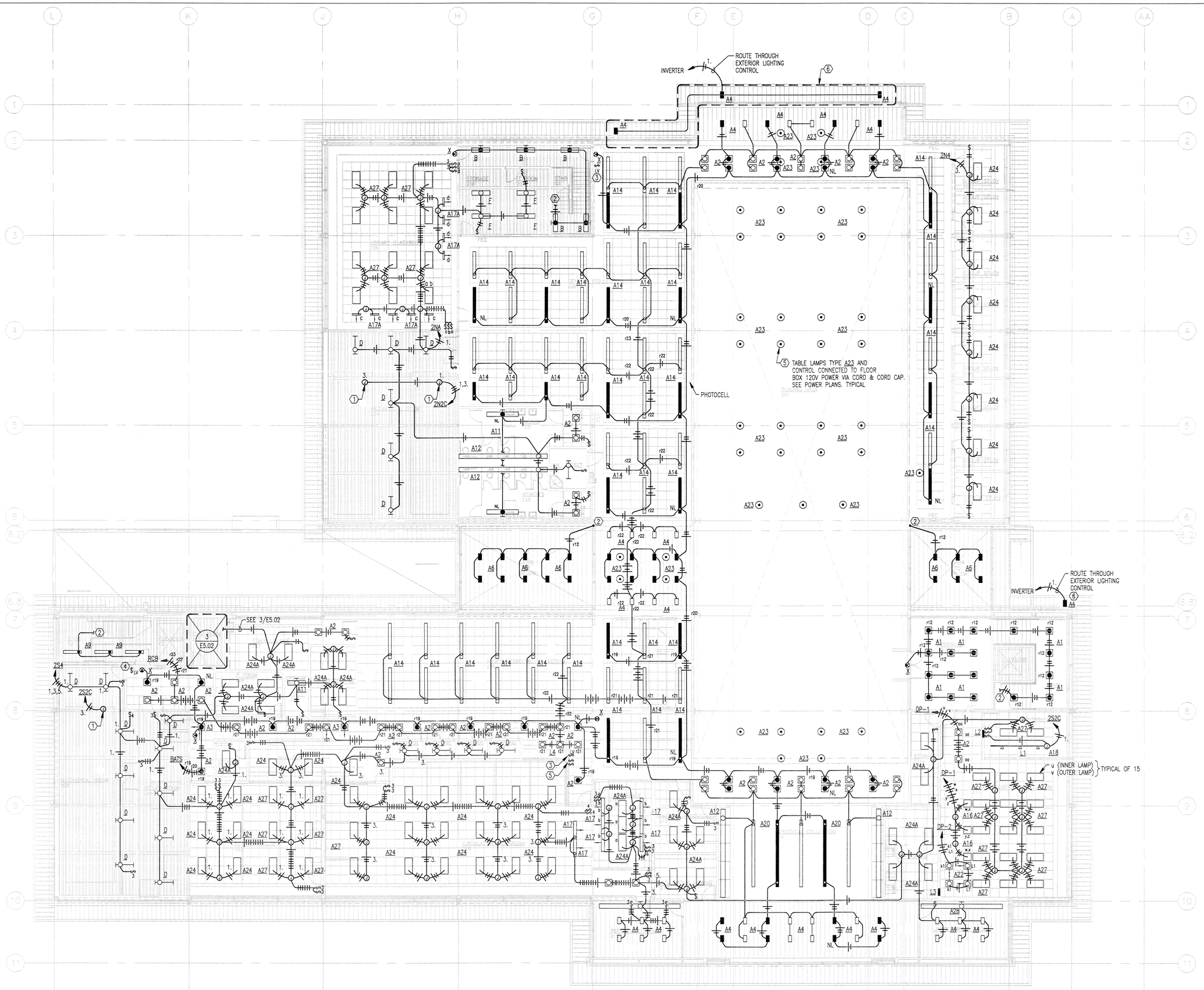

NOTES:

1. PROVIDE J-BOX FOR CONNECTION TO MECHANICAL EQUIPMENT INTERIOR LIGHTING AND CONTROL.
2. ROUTE DOWN TO FIRST FLOOR LIGHTING, SEE E2.01.
3. LOW VOLTAGE LIGHTING CONTROL CONFIGURATION:

4. LOW VOLTAGE LIGHTING CONTROL CONFIGURATION:

5. SWITCHES FOR CONTROL AT RELAYS CONTROLLING FLOOR BOX POWER AT READING TABLES. SEE DETAIL 6/5.03.
6. ROUTE CONDUIT IN INSULATION ABOVE CANOPY.

1 / E2.02 SECOND FLOOR PLAN – LIGHTING
SCALE: 1/8" = 1'-0"

SECOND FLOOR PLAN LIGHTING

PCC ROCK CREEK CAMPUS NEW BUILDING

PORTLAND COMMUNITY COLLEGE
ROCK CREEK CAMPUS
17705 NW Springville Road
PORTLAND, OREGON 97229

THOMAS HACKER ARCHITECTS INC
733 SW OAK STREET
PORTLAND, OREGON 97205
(503) 227-5354

PAE CONSULTING ENGINEERS
808 SW THIRD AVENUE
PORTLAND, OREGON 97204
(503) 226-2921

REGISTERED PROFESSIONAL ENGINEER 44775 OREGON JULY 13, 1999 GRANT R. PARTHEMER 5-14-03
EXPIRES 12-31-04

REVISIONS :	1 03/21/03	DRAWN BY :	WBD
		JOB NO. :	0115
DATE :	02/14/03		
SCALE :	NONE	DWG. NO.	E2.02

THOMAS HACKER ARCHITECTS INC.

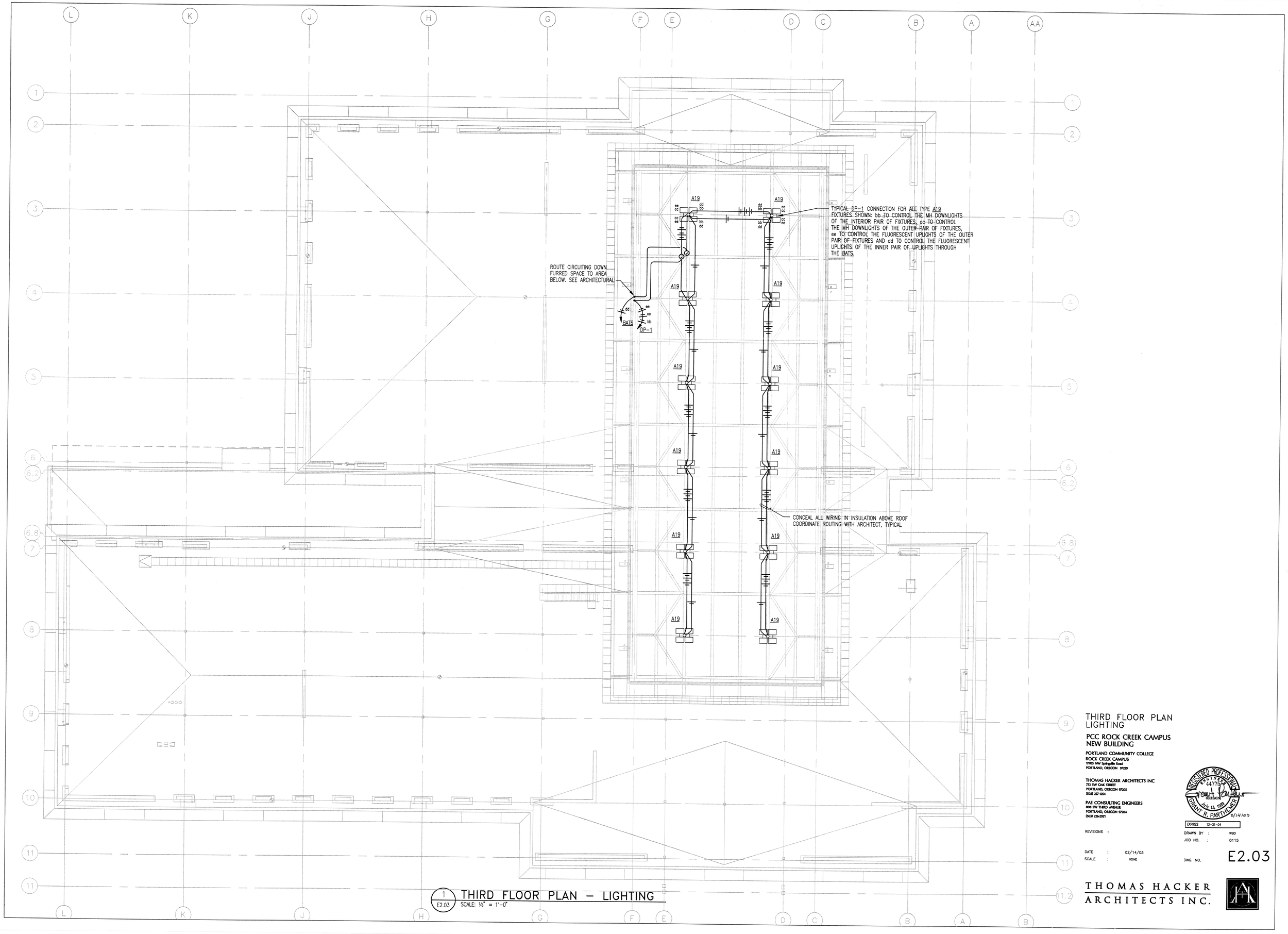

1 E2.03 THIRD FLOOR PLAN – LIGHTING
SCALE: 1/8" = 1'-0"

THIRD FLOOR PLAN LIGHTING

PCC ROCK CREEK CAMPUS NEW BUILDING

PORTLAND COMMUNITY COLLEGE
ROCK CREEK CAMPUS
17705 NW Springville Road
PORTLAND, OREGON 97229

THOMAS HACKER ARCHITECTS INC
733 SW OAK STREET
PORTLAND, OREGON 97205
(503) 227-1254

PAE CONSULTING ENGINEERS
808 SW THIRD AVENUE
PORTLAND, OREGON 97204
(503) 220-2521

REGISTERED PROFESSIONAL ENGINEER
44775
OREGON
July 13, 1989
GRANT R. PARTHEMER
2/14/03
EXPIRES 12-31-04

REVISIONS :

DRAWN BY : WBD
JOB NO. : 0115

DATE : 02/14/03
SCALE : NONE

DWG. NO. E2.03

THOMAS HACKER ARCHITECTS INC.

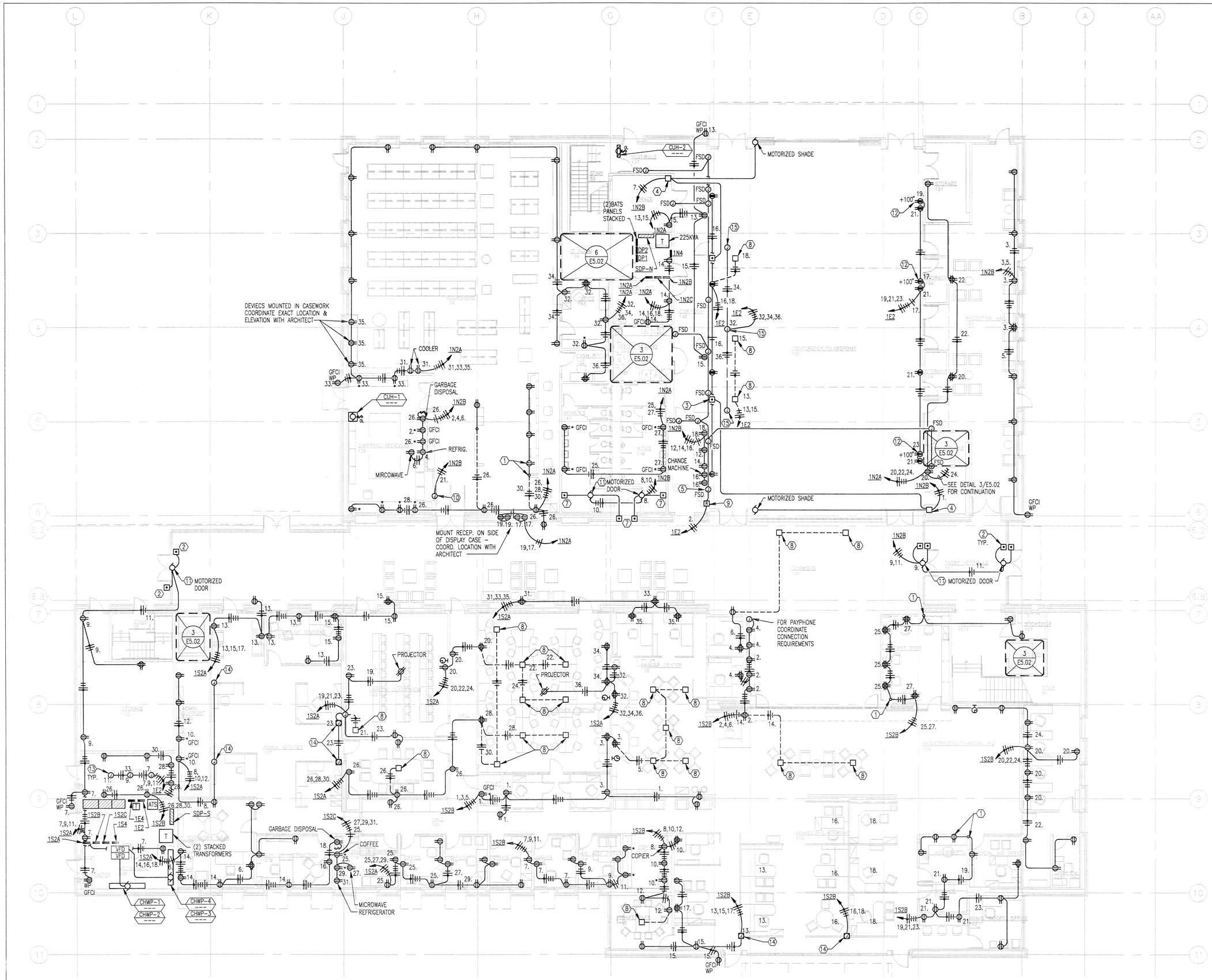

1 E3.01 FIRST FLOOR PLAN – POWER
SCALE: 1/8" = 1'-0"

GENERAL NOTES:

1. COORDINATE ALL DEVICE LOCATIONS WITH ARCHITECTURAL INTERIOR ELEVATIONS.
2. SEE EQUPMENT CONNECTION SCHEDULE ON E5.01 FOR ALL DEVICES NOT SHOWN CIRCUITED ON PLANS.
3. COORDINATE PARTITION CONNECTION REQUIREMENTS FOR ALL POWERED MODULAR FURNITURE. CONNECT DEVICES TO CIRCUITS DESIGNATED.
4. WALK ARCHITECT THROUGH J-BOX LAYOUT PRIOR TO WIRING.

NOTES:

1. STUB INTO CASEWORK AND MOUNT RECEPTACLES IN CASEWORK. COORDINATE WITH CASEWORK SUPPLIER AND ARCHITECT.
2. MOUNT TO MULLION. SEE DETAIL 6/E5.03 TYPICAL. PROVIDE ½" CONDUIT FROM MOTOR TO MULLION.
3. SHADE LV CONTROL SWITCH. TYPICAL OF 2. COORDINATE WITH DRAPERY SUPPLIER.
4. SHADE CONTROL MODULE. COORDINATE WITH SHADE SUPPLIER.
5. COORDINATE CONNECTION OF FIRE SMOKE DAMPERS WITH MECHANICAL.
6. COORDINATE J-BOX LOCATATION WITH RACKS. COORDINATE QUANTITY AND LOCATION OF RACK MOUNTED RECEPTACLES IN THIS AREA.
7. WALL MOUNT MOTORIZED DOOR CONTROL SWITCH COORDINATE ROUGH IN AND PATHWAY REQUIREMENT WITH SUPPLIER.
8. PROVIDE SPIDER MANUFACTUREING #AFB-501 FLUSH FLOOR BOX WITH #AFB-501-PB CONCRETE POUR ADAPTER WITH (2) DUPLEX RECEPTACLES. COORDINATE EXACT LOCATION WITH ARCHITECT.
9. PROVIDE INTERPOSING RELAY FOR CONTROL OF FSD CIRCUIT. PROVIDE CONTROL CONNECTION TO FA PANEL. SEE 5/E5.03.
10. PROVIDE STEEL FLOOR BOX 5"X5" MOUNTED FLUSH IN FLOOR. PROVIDE COVER, GASKET, AND CARPET RING AS REQUIRED. CONNECT POWER CORD TO CIRCUIT SHOWN. COORDINATE WITH SECURITY GATE SUPPLIER FOR 3M MODEL #3802 BURIED POWER INSTALLATION INSTRUCTIONS.
11. COORDINATE CONNECTION OF DOOR CONTROL MOTOR WITH MOTOR SUPPLIER AND ARCHITECT. CONCEAL ALL CONDUIT.
12. FOR PROJECTOR COORDINATE WITH ARCHITECTURAL LOCATION.
13. CONNECT TO PLUGSTRIP FURNISHED WITH TELECOM RACKS. COORDINATE WITH TELECOMMUNICATIONS CONTRACTOR.
14. PROVIDE FLUSH SERIES FURNITURE FEED FLOOR BOX CONNECTION TO PARTITION. HUBBELL ONE PIECE UNIT COORDINATED FLOOR BOX LOCATION WITH ARCHITECT.
15. MOTORIZED PROJECTION SCREEN. INSTALL CONTROL FURNISHED WITH SCREEN. VERIFY LOCATION WITH ARCHITECT.

FIRST FLOOR PLAN POWER

PCC ROCK CREEK CAMPUS NEW BUILDING

PORTLAND COMMUNITY COLLEGE
ROCK CREEK CAMPUS
17705 NW Springville Road
PORTLAND, OREGON 97229

THOMAS HACKER ARCHITECTS INC
733 SW OAK STREET
PORTLAND, OREGON 97205
(503) 227-1254

PAE CONSULTING ENGINEERS
808 SW THIRD AVENUE
PORTLAND, OREGON 97204
(503) 226-2921

REGISTERED PROFESSIONAL ENGINEER 44775 OREGON JULY 13, 1990 GRANT R. PARTHEMER 5-19-03
EXPIRES 12-31-04

REVISIONS : 1 03/21/03	DRAWN BY : WBD
	JOB NO. : 0115
DATE : 02/14/03	
SCALE : 1/8" = 1'-0"	DWG. NO. E3.01

THOMAS HACKER ARCHITECTS INC.

15:09 03/19/03 0081200 809E301.dwg xs3706KSJR.STORGRP o2789911.1B809X.R809E1 bruced [XE3882SF.pc3 XE3882SF.ctb]

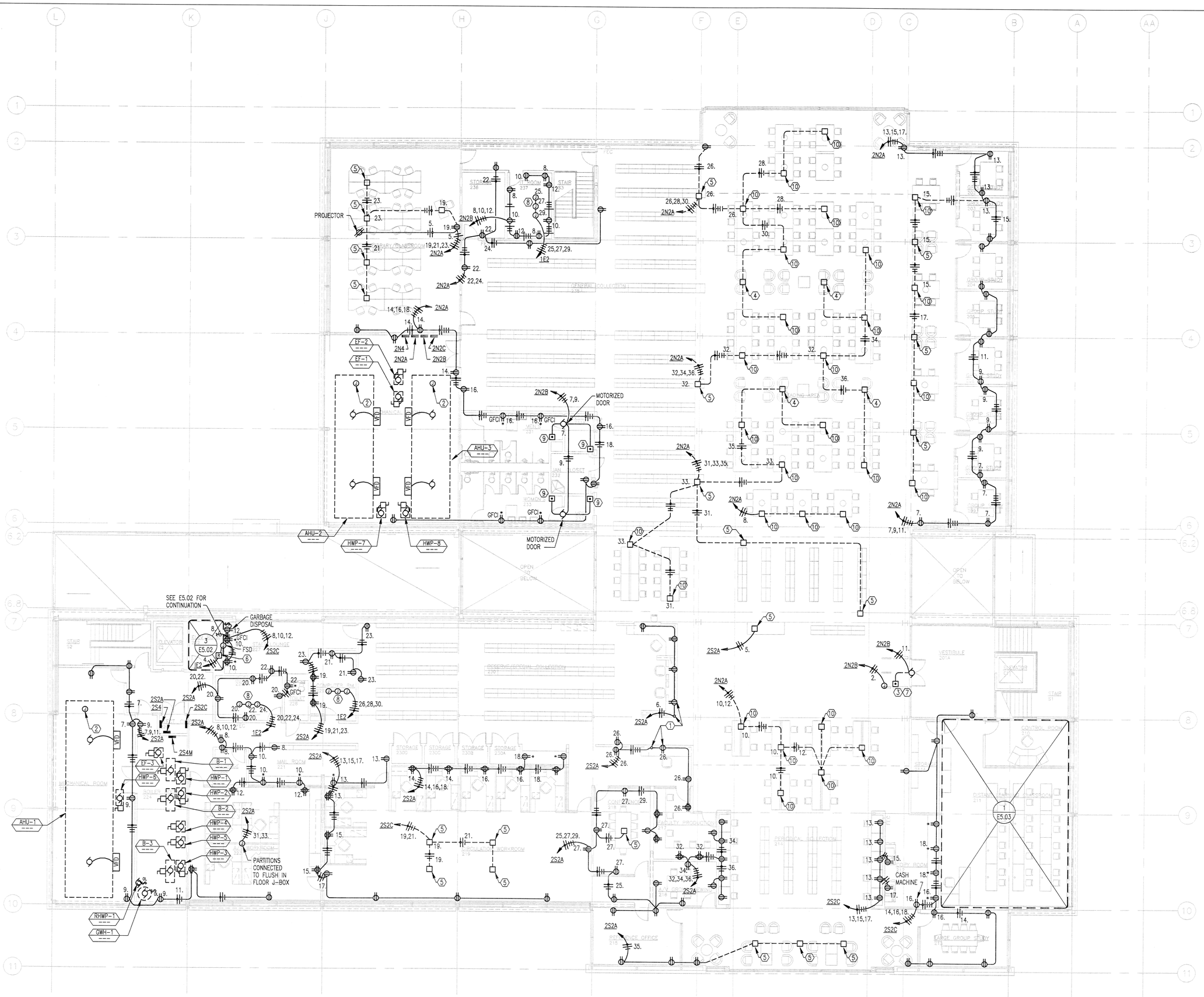

1 E3.02 SECOND FLOOR PLAN – POWER
SCALE: 1/8" = 1'-0"

GENERAL NOTES:

1. COORDINATE ALL DEVICE LOCATIONS WITH ARCHITECTURAL INTERIOR ELEVATIONS.
2. SEE EQUIPMENT CONNECTION SCHEDULE ON E5.01 FOR ALL DEVICES NOT SHOWN CIRCUITED ON PLANS.
3. COORDINATE PARTITION CONNECTION REQUIREMENTS FOR ALL POWERED MODULAR FURNITURE. CONNECT DEVICES TO CIRCUITS DESIGNATED.
4. WALK ARCHITECT THROUGH J-BOX LAYOUT PRIOR TO WIRING.

NOTES:

(1) STUB UP IN CASEWORK AND MOUNT RECEPTACLES IN CASEWORK. COORDINATE WITH CASEWORK SUPPLIER AND ARCHITECT.

(2) PROVIDE CONNECTION TO RECEPTACLE AND LIGHTS IN MECHANICAL EQUIPMENT. SEE EQUIPMENT CONNECTION SCHEDULE.

(3) MOUNT DOOR CONTROLLER 3 IN LOW WALL.

(4) PROVIDE SPIDER MANUFACTUREING #AFB-301 FLUSH FLOOR BOX WITH #AFB-301-PB CONCRETE POUR ADAPTER FLOOR BOX WITH (3) DUPLEX RECEPTACLES. COORDINATE EXACT LOCATION WITH ARCHITECT.

(5) PROVIDE SPIDER MANUFACTUREING #AFB-301 FLUSH FLOOR BOX WITH #AFB-301-PB CONCRETE POUR ADAPTER FLOOR BOX WITH (2) DUPLEX RECEPTACLES. COORDINATE EXACT LOCATION WITH ARCHITECT.

(6) PROVIDE INTERPOSING RELAY FOR CONTROL OF FSD CIRCUIT. PROVIDE CONTROL CONNECTION TO FA PANEL. SEE 5/E5.03.

(7) PROVIDE STEEL FLOOR BOX 5"X5" MOUNTED FLUSH IN FLOOR. PROVIDE COVER, GASKET, AND CARPET RING AS REQUIRED. CONNECT POWER CORD TO CIRCUIT SHOWN. COORDINATE WITH SECURITY GATE SUPPLIER FOR 3M MODEL #3802 BURIED POWER INSTALLATION INSTRUCTIONS.

(8) CONNECT TO PLUGSTRIP FURNISHED WITH TELECOM RACKS. COORDINATE WITH TELECOMMUNICATIONS CONTRACTOR.

(9) WALL MOUNT MOTORIZED DOOR CONTROL SWITCH COORDINATE ROUGH IN AND PATHWAY REQUIREMENT WITH SUPPLIER.

(10) PROVIDE HUBBEL FLUSH FLOOR BOX WITH MC CABLE UP TABLE LEG TO TASK LAMP SWITCH. CONNECT SWITCH AND LAMPS ON TABLE AS REQUIRED. COORDINATE WITH ARCHITECT.

SECOND FLOOR PLAN
POWER

PCC ROCK CREEK CAMPUS
NEW BUILDING

PORTLAND COMMUNITY COLLEGE
ROCK CREEK CAMPUS
17705 NW Springville Road
PORTLAND, OREGON 97229

THOMAS HACKER ARCHITECTS INC
733 SW OAK STREET
PORTLAND, OREGON 97205
(503) 227-1254

PAE CONSULTING ENGINEERS
808 SW THIRD AVENUE
PORTLAND, OREGON 97204
(503) 226-2521

REGISTERED PROFESSIONAL ENGINEER 44775 OREGON JULY 15, 1988 GRANT R. PARTHEMER
EXPIRES 12-31-04

REVISIONS : 1 03/21/03

DRAWN BY : WBD
JOB NO. : 0115
DATE : 02/14/03
SCALE : 1/8" = 1'-0"
DWG. NO. E3.02

THOMAS HACKER ARCHITECTS INC.

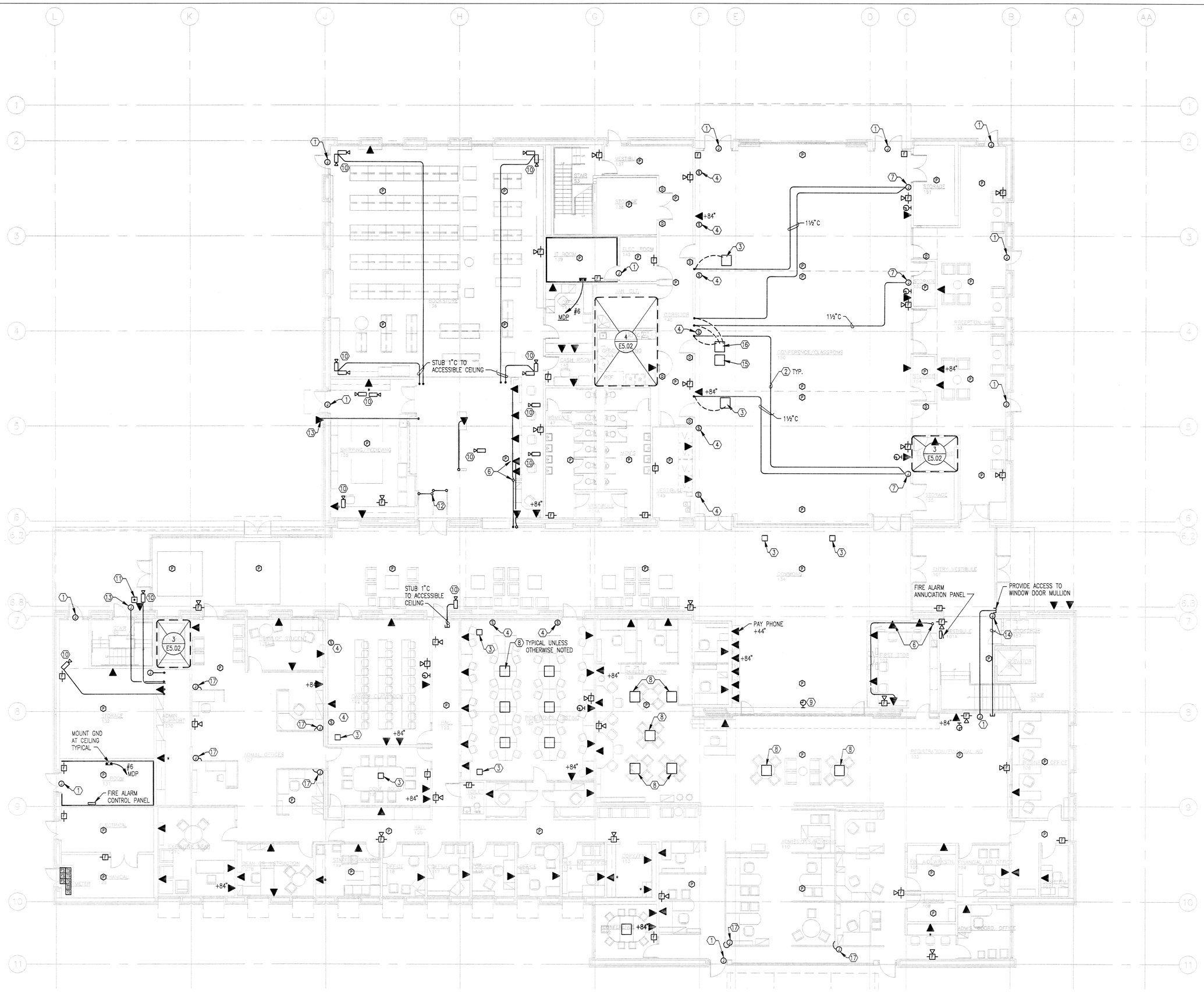

1 E4.01 FIRST FLOOR PLAN – SIGNAL
SCALE: 1/8" = 1'-0"

GENERAL NOTES:

1. COORDINATE ALL DEVICE LOCATIONS WITH ARCHITECTURAL.
2. PROVIDE 1¼" CONDUIT UP TO ABOVE ACCESSIBLE CEILING FROM ALL FLOOR BOXES AND WALL DATA BOXES SHOWN FOR NETWORK SERVICES UON. DRILL HOLE AS REQUIRED TO CONNECT CONDUIT TO BOX.
3. WHERE DEVICES ARE SHOWN BELOW WINDOWS, ROUTE 1" CONDUIT OVER TO NEAREST WALL TO CEILING. MINIMIZE BENDS.

NOTES:

(1) PROVIDE JUNCTION BOX ABOVE DOOR HEADER TO ACCOMMODATE SECURITY REQUIREMENTS. COORDINATE WITH ARCHITECTURAL AND OWNER. STUB ¾" CONDUIT TO NEAREST ACCESSIBLE CEILING. PROVIDE J-BOX FOR CARD READER. COORDINATE WITH SECURITY SUPPLIER. WIRE TO FA FOR INSTRUCTIONS.

(2) PROVIDE CONDUIT FOR A/V.

(3) FLUSH FLOOR BOX. SEE E3.01 FOR SPEC. PROVIDE 1½" CONDUIT TO ABOVE CEILINGS AS SHOWN FOR PODIUM A/V AND (2) 1" NETWORK. COORDINATE LOCATION W/POWER FLOOR BOXES SEE E3.01.

(4) PROVIDE 1 GANG MUD RING WITH BLANK PLATE AND PULL STRING AT ALL SPEAKER LOCATION FLANKING SCREENS.

(5) INSTRUCTORS PODIUM.

(6) STUB IN CASEWORK AND MOUNT TELECOM PROVISIONS IN CASEWORK. COORDINATE WITH CASEWORK SUPPLIER AND ARCHITECT.

(7) J-BOX FOR A/V LOCATED IN CEILING SPACE. COORDINATE WITH ARCHITECT FOR EXACT LOCATION.

(8) FLOOR BOX WITH 1" CONDUIT TO NEAREST WALL OR ACCESSIBLE CEILING SPACE. COORDINATE EXACT LOCATION WITH ARCHITECT. SEE E3.01 FOR SPEC.

(9) CLOCK AND PROGRAM CLOCK CONNECT TO MASTER CLOCK CONTROL PANEL SYSTEM. EQUAL TO SIMPLEX.

(10) CCTV SECURITY CAMERA. NO WORK REQUIRED WHERE CAMERA IS ON ACCESSIBLE CEILING. PROVIDE ROUGH-IN SHOWN.

(11) PROVIDE WEATHER PROOF PUSH BUTTON TO ACTIVATE INTERCOM AT LIBRARY CIRCULATION DESK.

(12) PROVIDE 1¼" RIGID NON METALLIC CONDUIT IN FLOOR FOR SECURITY GATE INTERCONNECTION. COORDINATE WITH SECURITY GATE SUPPLIER FOR 3M MODEL #3802 BARIED CABLE INSTALLATION INSTRUCTIONS.

(13) PROVIDE TALK-A-PHONE MS-400 FLUSH MOUNTING STEEL BOX WITH 1" CONDUIT TO NEAREST ACCESSIBLE CEILING. DRILL HOLE AS REQUIRED TO CONNECT CONDUIT TO BOX.

(14) PROVIDE J-BOX IN WALL WITH 1" CONDUIT ROUTED TO ACCESSIBLE CEILING SPACE FOR MOTORIZED WINDOWS. COORDINATE WITH WINDOW SUPPLIER AND DIV. 15.

(15) POWER NETWORK FLOOR BOX SEE E3.01 FOR SPEC. PROVIDE 1"C. UP TO ABOVE ACCESSIBLE CEILING FOR NETWORK.

(16) SPIDER MFG AFB-501 FLUSH FLOOR BOX WITH AFB-501-PB CONCRETE POUR BOX LOCATED ADJACENT TO POWER/NETWORK BOX. PROVIDE 1½" CONDUITS FOR A/V AS SHOWN. DRILL BOX AS REQUIRED FOR CONDUITS.

(17) PROVIDE FLUSH FLOOR BOX FOR PARTITION LV SERVICE. HUBBEL ONE PIECE UNIT PROVIDE FLEX WHIP.

FIRST FLOOR PLAN SIGNAL

PCC ROCK CREEK CAMPUS NEW BUILDING

PORTLAND COMMUNITY COLLEGE
ROCK CREEK CAMPUS
17705 NW Springville Road
PORTLAND, OREGON 97229

THOMAS HACKER ARCHITECTS INC
733 SW OAK STREET
PORTLAND, OREGON 97205
(503) 227-1254

PAE CONSULTING ENGINEERS
808 SW THIRD AVENUE
PORTLAND, OREGON 97204
(503) 226-2521

REGISTERED PROFESSIONAL ENGINEER 44775 OREGON JULY 13, 1990 GRANT R. PARTHEMER
EXPIRES 12-31-04

REVISIONS :	1	03/21/03
DATE :		02/14/03
SCALE :		1/8" = 1'-0"
DRAWN BY :		WBD
JOB NO. :		0115
DWG. NO.		E4.01

THOMAS HACKER ARCHITECTS INC.

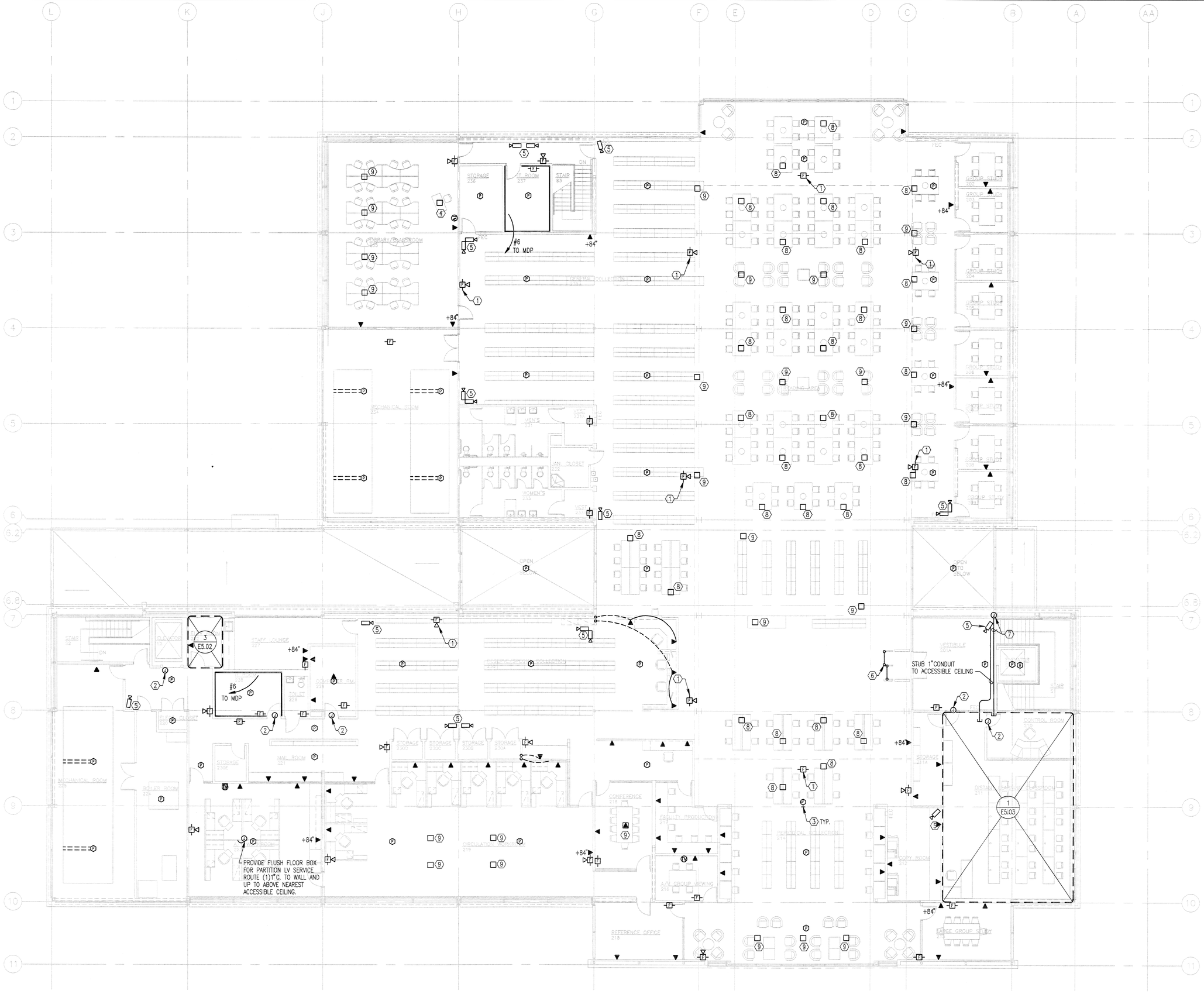

1 E4.02 SECOND FLOOR PLAN – SIGNAL
SCALE: 1/8" = 1'-0"

GENERAL NOTES:

1. COORDINATE ALL DEVICE LOCATIONS WITH ARCHITECTURAL INTERIOR ELEVATIONS.
2. PROVIDE 1¼" CONDUIT UP TO ABOVE ACCESSIBLE CEILING FROM ALL FLOOR BOXES AND WALL DATA BOXES SHOWN FOR NETWORK SERVICES UON. DRILL HOLE AS REQUIRED TO CONNECT CONDUIT TO BOX.
3. WHERE DEVICES ARE SHOWN BELOW WINDOWS, ROUTE 1" CONDUIT OVER TO NEAREST WALL TO CEILING. MINIMIZE BENDS.

NOTES:

1. MOUNT FIRE ALARM DEVICES ON CEILING.
2. PROVIDE JUNCTION BOX ABOVE DOOR HEADER TO ACCOMMODATE SECURITY REQUIREMENTS. COORDINATE WITH ARCHITECTURAL AND OWNER. STUB ¾" CONDUIT TO NEAREST ACCESSIBLE CEILING. PROVIDE J-BOX FOR CARD READER. COORDINATE WITH SECURITY SUPPLIER. WIRE TO FA PER INSTRUCTIONS.
3. CLOCK AND PROGRAM CLOCK. CONNECT TO MASTER CLOCK CONTROL PANEL SYSTEM. EQUAL TO SIMPLEX.
4. FLUSH FLOOR BOX. PROVIDE 1½" CONDUIT TO ABOVE CEILINGS AS SHOWN FOR PODIUM A/V AND NETWORK.
5. CCTV SECURITY CAMERA. NO WORK REQUIRED WHERE CAMERA IS ON ACCESSIBLE CEILING. PROVIDE ROUGH-IN SHOWN.
6. PROVIDE 1¼" RIGID NON METALLIC CONDUIT IN FLOOR FOR SECURITY GATE INTERCONNECTION. COORDINATE WITH SECURITY GATE SUPPLIER FOR 3M MODEL #3802 BARIED CABLE INSTALLATION INSTRUCTIONS.
7. PROVIDE J-BOX IN WALL WITH 1" CONDUIT ROUTED TO ACCESSIBLE CEILING SPACE FOR MOTORIZED WINDOWS. COORDINATE WITH WINDOW SUPPLIER AND DIV. 15.
8. DATA ONLY FLOOR BOX SPIDER MANUFACTURING #AFB-301 FLUSH FLOOR BOX WITH AFB-301-PB CONCRETE POUR ADAPTER LOCATE ADJACENT TO TABLE POWER FLOOR BOX – SEE E3.02. PROVIDE (1)1"C. TO WALL 7 UP TO ABOVE NEAREST ACCESSIBLE CEILING.
9. POWER/DATA FLUSH FLOOR BOX – SEE E3.02 FOR SPEC. PROVIDE (1)1"C. TO WALL & UP TO ABOVE NEAREST ACCESSIBLE CEILING.

SECOND FLOOR PLAN
SIGNAL

PCC ROCK CREEK CAMPUS
NEW BUILDING

PORTLAND COMMUNITY COLLEGE
ROCK CREEK CAMPUS
17705 NW Springville Road
PORTLAND, OREGON 97229

THOMAS HACKER ARCHITECTS INC
733 SW OAK STREET
PORTLAND, OREGON 97205
(503) 227-1254

PAE CONSULTING ENGINEERS
808 SW THIRD AVENUE
PORTLAND, OREGON 97204
(503) 236-2921

REGISTERED PROFESSIONAL ENGINEER 44775 OREGON JULY 13, 1990 GRANT R. PARTHEMER
EXPIRES 12-31-04

REVISIONS : 1 03/21/03

DATE : 02/14/03
SCALE : 1/8" = 1'-0"

DRAWN BY : WBD
JOB NO. : 0115

DWG. NO. E4.02

THOMAS HACKER ARCHITECTS INC.

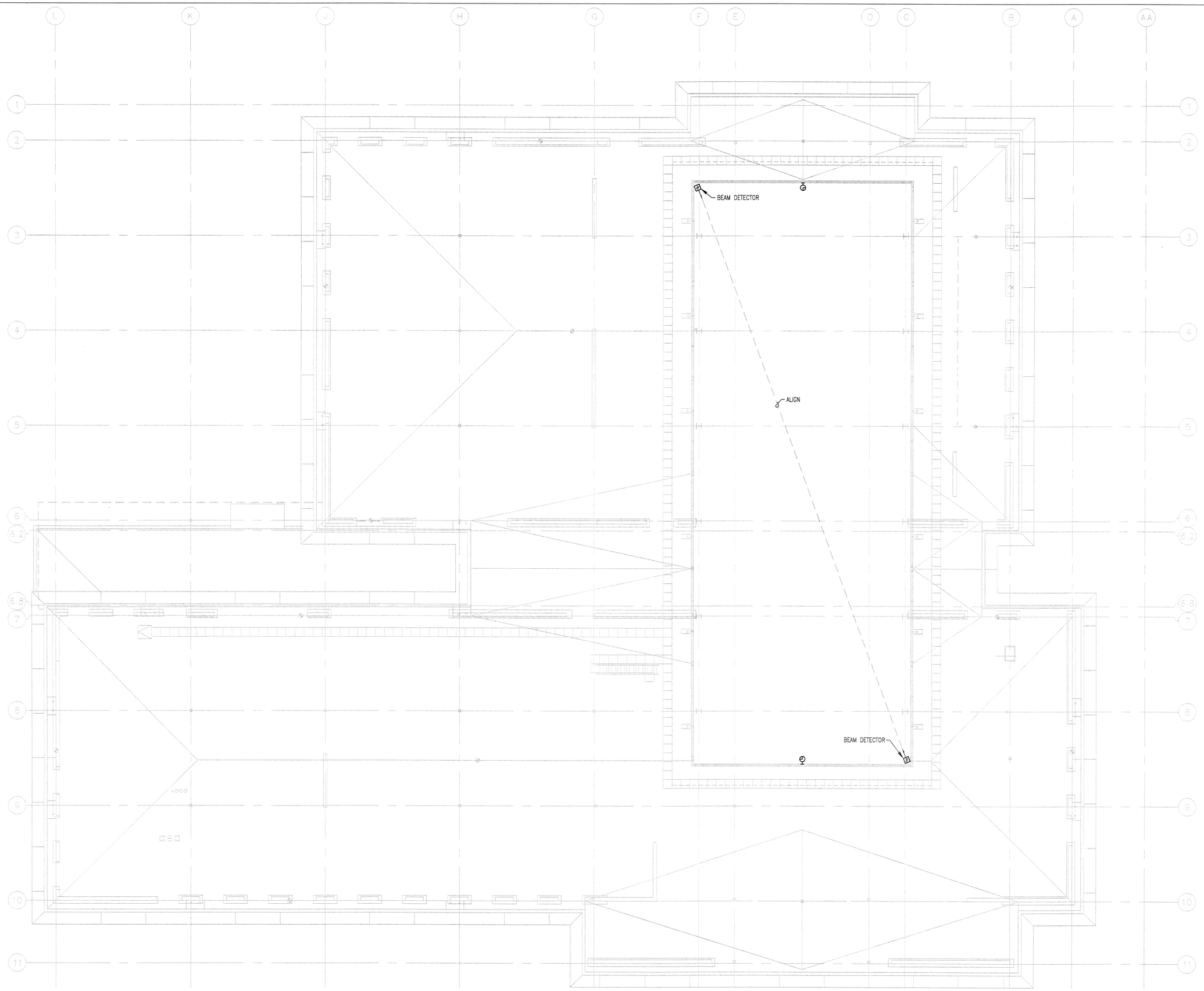

1 / E4.03 UPPER FLOOR PLAN – SIGNAL
SCALE: 1/8" = 1'-0"

GENERAL NOTES:

1. COORDINATE ALL DEVICE LOCATIONS WITH ARCHITECTURAL INTERIOR ELEVATIONS.

UPPER FLOOR PLAN
SIGNAL

PCC ROCK CREEK CAMPUS
NEW BUILDING

PORTLAND COMMUNITY COLLEGE
ROCK CREEK CAMPUS
17705 NW Springville Road
PORTLAND, OREGON 97229

THOMAS HACKER ARCHITECTS INC
733 SW OAK STREET
PORTLAND, OREGON 97205
(503) 227-1254

PAE CONSULTING ENGINEERS
808 SW THIRD AVENUE
PORTLAND, OREGON 97204
(503) 226-2921

REGISTERED PROFESSIONAL ENGINEER 44775 OREGON July 13, 1988 GRANT R. PARTHEMORE
3-19-03

EXPIRES 12-31-04

REVISIONS : 1 03/21/03

DRAWN BY : WBD
JOB NO. : 0115

DATE : 02/14/03
SCALE : 1/8" = 1'-0"

DWG. NO. E4.03

THOMAS HACKER
ARCHITECTS INC.

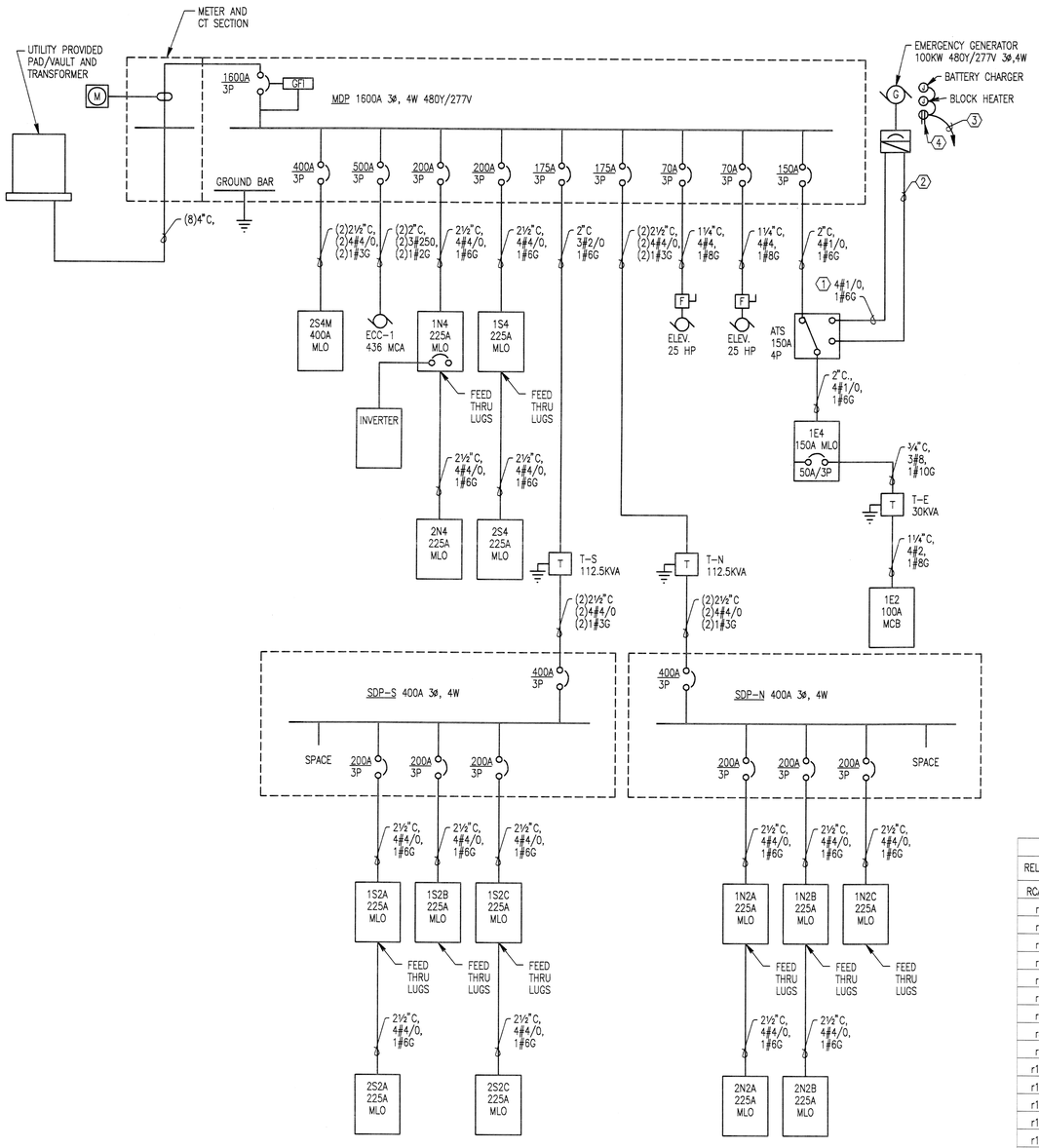

NOTES:

1. EXISTING 2" CONDUIT PROVIDED UNDER SITE PACKAGE. SEE 1/E1.01. EXTEND TO GENERATOR OUTPUT BREAKER AND ATS. PULL WIRE AS SHOWN.
2. EXISTING 1"CONDUIT PROVIDED UNDER SITE PACKAGE FOR CONTROL. EXTEND TO GENERATOR CONTROL PANEL AND ATS. PROVIDE WIRING AS REQUIRED.
3. EXISTING 1" CONDUIT PROVIDED UNDER SITE PACKAGE. PROVIDE 3#10, 1#10G FOR 120V BATTERY CHARGER AND 120V BLOCK HEATER AT GENERATOR. CONNECT TO CIRCUIT 33 IN PANEL 1E2.
4. PROVIDE WP, GFCI RECEPTACLE AT GENERATOR. CONNECT TO BLOCK HEATER CIRCUIT 31 IN PANEL 1E2.

1 / E5.01 ONE-LINE DIAGRAM
SCALE: NONE

EQUIPMENT SCHEDULE

ITEM #	EQUIPMENT DESCRIPTION	HP	MCA	FLA	VOLTS/PH	PANEL	CIRCUIT	WIRE	NOTES	VFD	1-POINT CONNECT	STARTER M OR E	DISCONNECT M OR E
AHU-1	Air Handling Unit												
SF-1	Supply Fan	50			480V/3PH	2S4M	1,3,5	1¼"C,3#4,1#8G		M	Y		
RF-1	Return Fan	15			480V/3PH	2S4M	7,9,11	½"C,2#10,1#10G		M	Y		
	Lights			6.25	120V/1PH	2S2C	3	½"C,2#12,1#12G			Y		
	Receptacle			3	120V/1PH	2S2C	5	½"C,2#12,1#12G			Y		
AHU -2	Air Handling Unit												
SF-2	Supply Fan	30			480V/3PH	2S4M	2,4,6	1"C,3#8,1#8G		M	Y		
RF-2	Return Fan	10			480V/3PH	2S4M	8,10,12	½"C,3#12,1#12G		M	Y		
	Lights			6.25	120V/1PH	2N2B	1	½"C,2#12,1#12G			Y		
	Receptacle			3	120V/1PH	2N2A	25	½"C,2#12,1#12G			Y		
AHU -3	Air Handling Unit												
SF-3	Supply Fan	30			480V/3PH	2S4M	13,15,17	1"C,3#8,1#8G		M	Y		
RF-3	Return Fan	10			480V/3PH	2S4M	19,21,23	½"C,3#12,1#12G		M	Y		
	Lights			6.25	120V/1PH	2N2B	3	½"C,2#12,1#12G			Y		
	Receptacle			3	120V/1PH	2N2A	27	½"C,2#12,1#12G			Y		
HWP-1	Hot Water Pump	3/4			480V/3PH	2S4M	14,16,18	½"C,3#12,1#12G			Y	M	E
HWP-2	Hot Water Pump	3/4			480V/3PH	2S4M	20,22,24	½"C,3#12,1#12G			Y	M	E
HWP-3	Hot Water Pump	3/4			480V/3PH	2S4M	25,27,29	½"C,3#12,1#12G			Y	M	E
HWP-4	Hot Water Pump	7 1/2			480V/3PH	2S4M	26,28,30	½"C,3#12,1#12G		M	Y		
HWP-5	Hot Water Pump	7 1/2			480V/3PH	2S4M	32,34,36	½"C,3#12,1#12G		M	Y		
HWP-6	Hot Water Pump	1/2			480V/3PH	2S4M	31,33,35	½"C,3#12,1#12G			Y	M	E
HWP-7	Hot Water Pump	1/6			120V/1PH	2N2A	1	½"C,3#12,1#12G			Y	M	M
HWP-8	Hot Water Pump	1/6			120V/1PH	2N2A	3	½"C,3#12,1#12G			Y	M	M
CHWP-1	Chilled Water Pump	5			480V/3PH	1S4	13,15,17	½"C,3#12,1#12G			Y	M	E
CHWP-2	Chilled Water Pump	5			480V/3PH	1S4	7,9,11	½"C,3#12,1#12G			Y	M	E
CHWP-3	Chilled Water Pump	10			480V/3PH	1S4	2,4,6	½"C,3#12,1#12G		M	Y		
CHWP-4	Chilled Water Pump	10			480V/3PH	1S4	8,10,12	½"C,3#12,1#12G		M	Y		
ECC-1	Evaporative Condensing Chiller		436		480V/3PH	MDP	SEE SCHEDULE	SEE ONE-LINE			Y	M	M
	Control			1	120V/1PH	1S2A	3	½"C,2#12,1#12G			Y		
	Heat Tape			1	120V/1PH	1S2A	1	½"C,3#12,1#12G			Y		
B-1	Boiler			20	120V/1PH	2S2A	1	½"C,2#12,1#12G			Y		E
B-2	Boiler			20	120V/1PH	2S2A	3	½"C,2#12,1#12G			Y		E
B-3	Boiler			20	120V/1PH	2S2A	5	½"C,2#12,1#12G			Y		E
EF-1	Exhaust Fan	1			208V/3PH	2N2A	2,4,6	½"C,3#12,1#12G			Y	M	E
EF-2	Exhaust Fan	1/2			120V/1PH	2S2A	2	½"C,3#12,1#12G			Y	M	E
CUH-1	Cabinet Unit Heaters	1/16			120V/1PH	1N2A	1	½"C,2#12,1#12G			Y		E
CUH-2	Cabinet Unit Heaters	1/16			120V/1PH	2S2A	2	½"C,2#12,1#12G			Y		E
GWH-1	Gas Water Heater			1.8	120V/1PH	2S2C	7	½"C,2#12,1#12G			Y		E
RHWP-1	Recirculating Hot Water Pump			1.8	120V/1PH	2S2C	9	½"C,2#12,1#12G			Y		E
SP-1	Elevator Sump Pump	1/2			120V/1PH	1N2C	1	½"C,2#12,1#12G			Y		
SP-2	Elevator Sump Pump	1/2			120V/1PH	1S2C	1	½"C,2#12,1#12G			Y		

RELAY CONTROL SCHEDULE

RELAY	LOAD	PANEL	CIRCUIT	NOTES
RCA				
r1	1575	1N2C	1	BOOK STORE TRACK
r2	1575	1N2C	3	BOOK STORE TRACK
r3	1575	1N2C	5	BOOK STORE TRACK
r4	1575	1N2C	7	BOOK STORE TRACK
r5	1575	1N2C	2	BOOK STORE TRACK
r6	1575	1N2C	4	BOOK STORE TRACK
r7	1575	1N2C	6	BOOK STORE TRACK
r8	1575	1N2C	8	BOOK STORE TRACK
r9	1904	1N4	1	BOOK STORE LTG
r10	778	1N4	3	BOOK STORE LTG
r11	717	1N4	3	BOOK STORE LTG
r12	800	1E4	3	THROUGH RELAY BATS
r13	628	1E4	3	THROUGH RELAY BATS
r14	336	1E4	3	THROUGH RELAY BATS
r15	840	1E4	3	THROUGH RELAY BATS
r16	1764	1N4	6	SOUTH WEST LTG
r17	2484	1N4	8	SOUTH WEST LTG
r18	888	1N4	8	SOUTH WEST LTG
r24	1000	1N2C	9	LV TRANSFORMER
r25	93	1E4	1	THROUGH RELAY BATS
r26	372	1E4	1	THROUGH RELAY BATS
r27	496	1E4	1	THROUGH RELAY BATS
RCB				
r19	1804	1E4	5	THROUGH RELAY BATS
r20	2724	1E4	7	THROUGH RELAY BATS
r21	2696	2S4	2	2ND FLOOR LTG
r22	3444	2S4	4	2ND FLOOR LTG
r23	2592	2S4	6	2ND FLOOR LTG

BRANCH AUTOMATIC TRANSFER SWITCH (BATS) SCHEDULE

MODULE	DIMMER. FEED		EMERG. FEED		AREA SERVED
	PANEL	CIRCUIT	PANEL	CIRCUIT	
DIMMER BATS					
1	DP-1	b	1E4	2	CLASSROOM
2	DP-1	dd	1E4	4	LIBRARY
3	DP-1	a	1E4	2	CLASSROOM
4	DP-1	g	1E4	2	CLASSROOM
5	DP-1	h	1E4	2	CLASSROOM
6	DP-1	l	1E4	2	CLASSROOM
7	DP-1	o	1E4	2	CLASSROOM
8	DP-1	p	1E4	2	CLASSROOM
9					SPARE
10					SPARE
11					SPARE
12					SPARE

MODULE	RELAY FEED		EMERG. FEED		AREA SERVED
	PANEL	CIRCUIT	PANEL	CIRCUIT	
RELAY BATS					
1	RPA	r12	1E4	3	
2	RPA	r13	1E4	3	
3	RPA	r14	1E4	3	
4	RPA	r15	1E4	3	
5	RPB	r19	1E4	5	
6	RPB	r20	1E4	7	
7	RPA	r25	1E4	8	BOOKSTORE
8	RPA	r26	1E4	8	BOOKSTORE
9	RPA	r27	1E4	8	BOOKSTORE
10					
11					
12					

DP-1 SCHEDULE 480Y/277V

DIMMER		LOAD	EMERG. FEED		NOTES
DESIG.	SPEC		PANEL	CIRCUIT	
a	2	252	1E4	2	3 WIRE – SEE BATS SCHED.
b	3	756	1E4	2	3 WIRE – SEE BATS SCHED.
c	4	180	–	–	NON DIM
d	8	80	–	–	NON DIM
e	9a	240	–	–	NON DIM
f	9b	320	–	–	NON DIM
g	10	252	1E4	2	3 WIRE – SEE BATS SCHED.
h	11	504	1E4	2	3 WIRE – SEE BATS SCHED.
i	12	252	1E4	2	3 WIRE – SEE BATS SCHED.
j	13	180	–	–	NON DIM
k	14	180	–	–	NON DIM
l	20	80	–	–	NON DIM
m	21	240	–	–	NON DIM
n	22	320	–	–	NON DIM
o	26	252	1E4	2	3 WIRE – SEE BATS SCHED.
p	27	756	1E4	2	3 WIRE – SEE BATS SCHED.
q	28	180	–	–	NON DIM
r	32	80	–	–	NON DIM
s	33	240	–	–	NON DIM
t	34	320	–	–	NON DIM
u	41	450	–	–	NON DIM
v	42	900	–	–	NON DIM
w	43	160	–	–	NON DIM
x	44	160	–	–	NON DIM
y	45	80	–	–	NON DIM
z	46	80	–	–	NON DIM
aa	49	80	–	–	NON DIM
bb	50	1200	–	–	NON DIM
cc	51	2880	–	–	NON DIM
dd	52	1200	1E4	4	3 WIRE – SEE BATS SCHED.
ee	53	1880	–	–	NON DIM

DP-2 SCHEDULE 208Y/120V

DIMMER		LOAD	EMERG. FEED		NOTES
DESIG.	SPEC		PANEL	CIRCUIT	
a1	5	300	–	–	INC. 2 WIRE – DIM
b1	7	1800	–	–	INC. 2 WIRE – DIM
c1	15	300	–	–	INC. 2 WIRE – DIM
d1	17	1350	–	–	INC. 2 WIRE – DIM
e1	18	300	–	–	INC. 2 WIRE – DIM
f1	23	150	–	–	INC. 2 WIRE – DIM
g1	24	750	–	–	INC. 2 WIRE – DIM
h1	25	300	–	–	INC. 2 WIRE – DIM
i1	29	300	–	–	INC. 2 WIRE – DIM
j1	31	1800	–	–	INC. 2 WIRE – DIM
k1	47	300	–	–	INC. 2 WIRE – DIM
l1	48	300	–	–	INC. 2 WIRE – DIM

ONE-LINE DIAGRAM & SCHEDULES – ELECTRICAL

PCC ROCK CREEK CAMPUS NEW BUILDING

PORTLAND COMMUNITY COLLEGE
ROCK CREEK CAMPUS
17705 NW Springville Road
PORTLAND, OREGON 97229

THOMAS HACKER ARCHITECTS INC
733 SW OAK STREET
PORTLAND, OREGON 97205
(503) 227-1254

PAE CONSULTING ENGINEERS
808 SW THIRD AVENUE
PORTLAND, OREGON 97204
(503) 226-2521

REGISTERED PROFESSIONAL ENGINEER 44775 OREGON JULY 15, 1986 GRANT R. PARTHEMER
5-19-03
EXPIRES 12-31-04

REVISIONS : 1 03/21/03

DATE : 02/14/03
SCALE : NONE

DRAWN BY : WBD
JOB NO. : 0115

DWG. NO. E5.01

THOMAS HACKER ARCHITECTS INC.

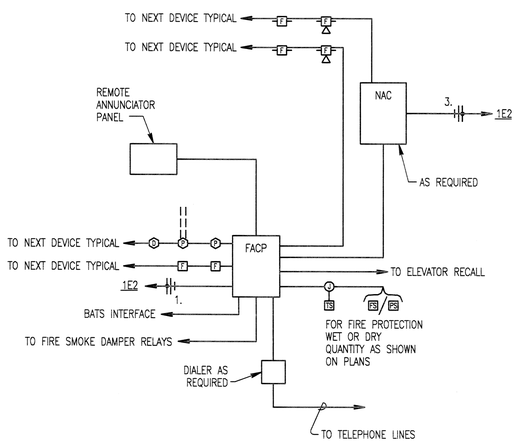

1 FIRE ALARM DIAGRAM
E5.02 SCALE: NONE

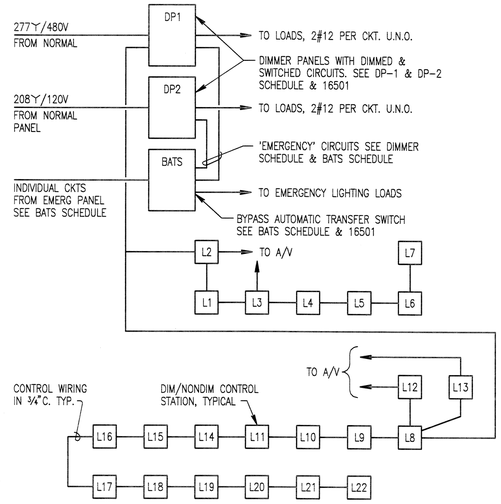

2 DIMMING SYSTEM ONE-LINE DIAGRAM
E5.02 SCALE: NONE

GENERAL NOTES:

1. PER NEC 620
   a. ELEVATOR MACHINE ROOM LIGHTING AND RECEPTACLE MUST HAVE SEPARATE CIRCUITS.
   b. ELEVATOR PIT LIGHTING AND RECEPTACLE. MUST HAVE SEPARATE CIRCUITS.
   c. ELEVATOR CAB LIGHTING AND HVAC MUST HAVE DISCONNECT MEANS IN THE ELEVATOR MACHINE ROOM.
2. NO CONDUIT CAN PASS THROUGH ELEVATOR SHAFT.
3. SUMP PUMP CONTROL PANELS CAN NOT BE IN THE ELEVATOR EQUIPMENT ROOM OR ELEVATOR PIT.
4. ELEVATOR CODE REQUIRES 5 FOOTCANDELS OF LIGHTING IN ELEVATOR PIT AND 10 FOOTCANDLES OF LIGHTING IN ELEVATOR MACHINE ROOM.

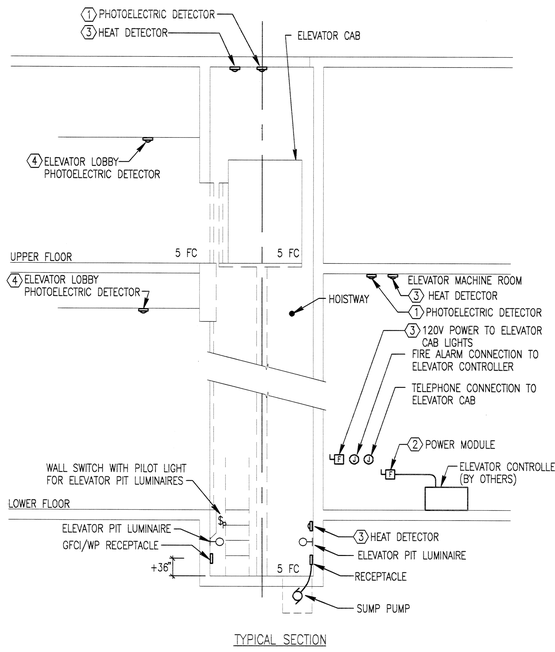

TYPICAL SECTION

NOTES:

1. PROVIDE AUXILIARY CONTACTS IN DETECTOR. CONNECT TO ELEVATOR CONTROLLER FOR ELEVATOR RECALL.
2. PROVIDE ELEVATOR POWER MODULE (WITH INTEGRAL SHUNT TRIP). CONNECT SHUNT TRIP CONTROL VIA HEAT DETECTORS' AUXILIARY CONTACTS IN HOISTWAY, EQUIPMENT ROOM AND PIT TO POWER MODULE. POWER SHALL BE AUTOMATICALLY DISCONNECTED UPON INITIATION OF ANY OF THESE HEAT DETECTORS AND PRIOR TO SPRINKLER WATER FLOW.
   a. LOCATE WITHIN 24" OF MACHINE ROOM DOOR. NOT REQUIRED TO BE NEMA 3R.
3. LOCATE FIXED TYPE HEAT DETECTOR WITHIN 24" OF SPRINKLER HEAD, COORDINATE THE SPRINKLER RESPONSE TIME. PROVIDE AUXILIARY CONTACTS IN DETECTOR. CONNECT TO POWER MODULE IN EQUIPMENT ROOM FOR ELEVATOR POWER SHUTDOWN.
   a. ALL THREE DETECTORS (ELEVATOR PIT, EQUIPMENT ROOM AND TOP OF ELEVATOR SHAFT) CAN BE ON THE SAME ZONE TO SHUT DOWN POWER.
   b. LOCATE WITHIN 24" OF SPRINKLER HEAD. HEAT DETECTOR FIXED TYPE, COORDINATE WITH SPRINKLER RESPONSE TIME.
4. PROVIDE AUXILIARY CONTACTS IN DETECTOR. CONNECT TO ELEVATOR CONTROLLER (FOR RESPECTIVE ELEVATOR DOOR LOCK-OUT).
   a. LOCATE DETECTOR IN TYPICAL 4'-6" RADIUS AREA FROM CENTER OF ELEVATOR DOOR.
   b. PROVIDE N.O. DRY CONTACT IN ELEVATOR LOBBY DETECTOR TO ACTUATE ELEVATOR SMOKE DOOR. SEE DETAIL 3/E8.1.
5. PROVIDE DISCONNECT MEANS FOR ELEVATOR CAB LIGHTING. SEE SPECIFICATIONS.
6. IN ELEVATOR PIT WALL, COORDINATE ROUGH-IN WITH GENERAL CONTRACTOR.

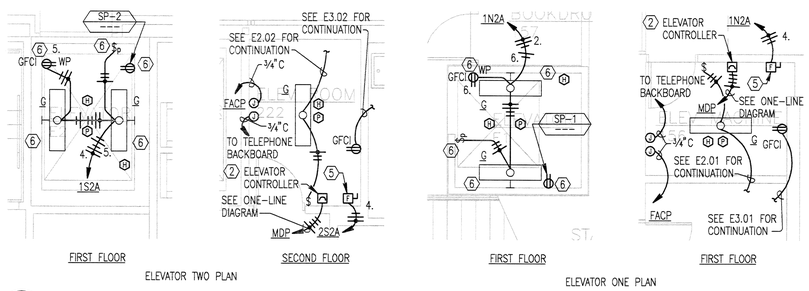

3 TYPICAL ELEVATOR DETAIL
E5.02 SCALE: NONE

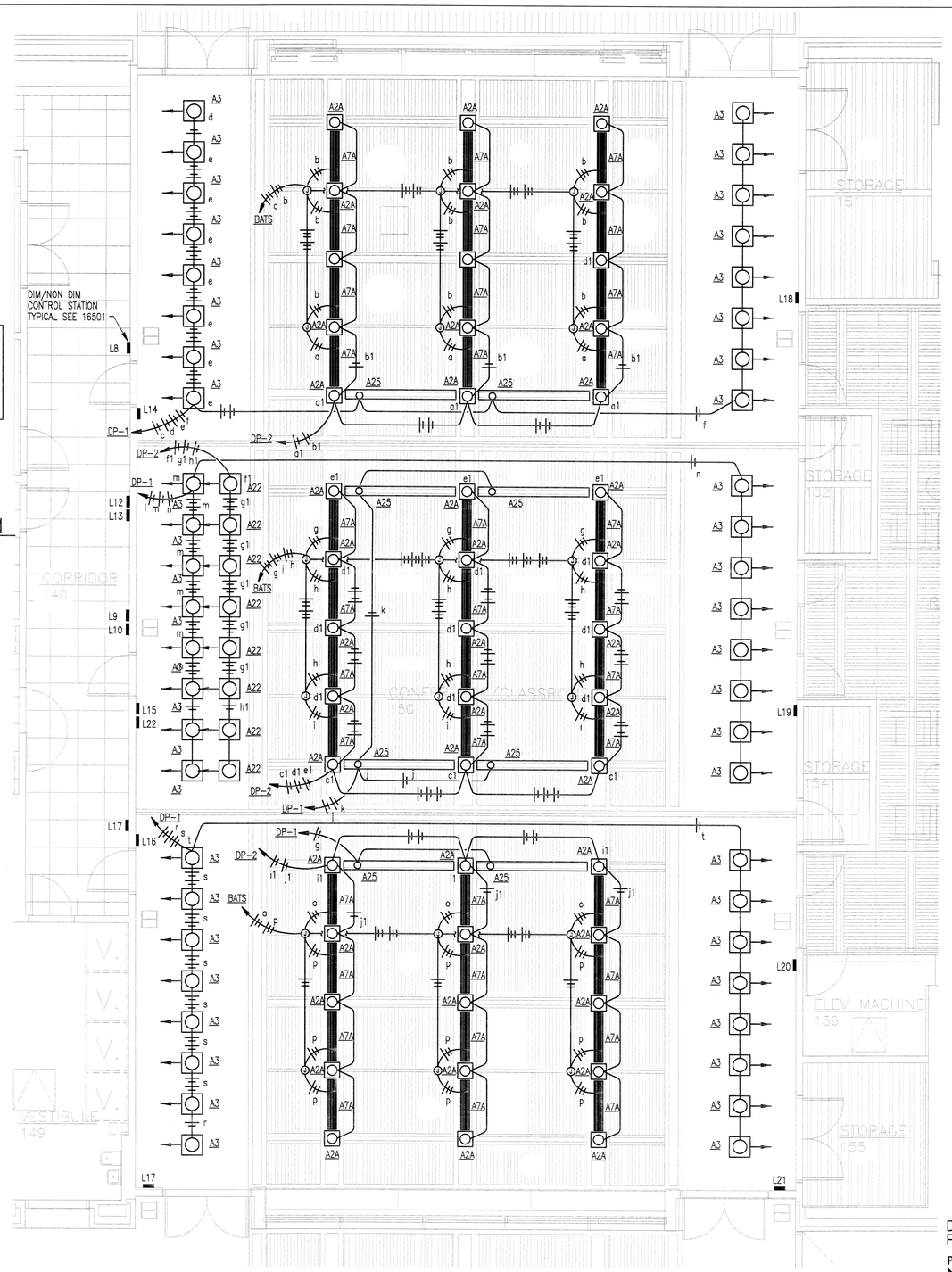

6 ENLARGED LIGHTING PLAN – FIRST FLOOR
E5.02 SCALE: 1/4" = 1'-0"

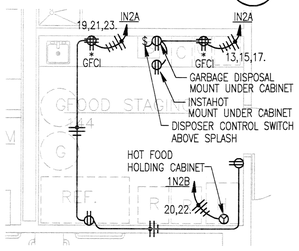

4 KITCHEN ENLARGED PLAN
E5.02 SCALE: 1/4" = 1'-0"

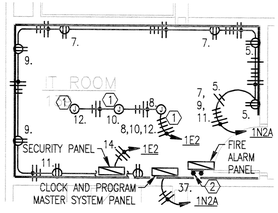

NOTES:

1. COORDINATE J-BOX LOCATIONS WITH RACKS. COORDINATE QUANTITY AND LOCATION OF RECEPTACLES MOUNTED ON RACKS AS REQUIRED.
2. PROVIDE GROUND BUS WITH (1) #4 CU TO MDP GROUND FOR IT CONNECTIONS.

5 IT ENLARGED PLAN
E5.02 SCALE: 1/4" = 1'-0"

DETAILS & ENLARGED PLANS – ELECTRICAL

PCC ROCK CREEK CAMPUS
NEW BUILDING

PORTLAND COMMUNITY COLLEGE
ROCK CREEK CAMPUS
17705 NW Springville Road
PORTLAND, OREGON 97229

THOMAS HACKER ARCHITECTS INC
733 SW OAK STREET
PORTLAND, OREGON 97205
(503) 227-1254

PAE CONSULTING ENGINEERS
808 SW THIRD AVENUE
PORTLAND, OREGON 97204
(503) 226-2921

REGISTERED PROFESSIONAL ENGINEER 44775 OREGON JULY 15, 1988 GRANT R. PARTHEMER
5-16-02
EXPIRES 12-31-04

REVISIONS :	1	03/21/03
DATE :		02/14/03
SCALE :		NONE

DRAWN BY : WBD
JOB NO. : 0115
DWG. NO. E5.02

THOMAS HACKER ARCHITECTS INC.

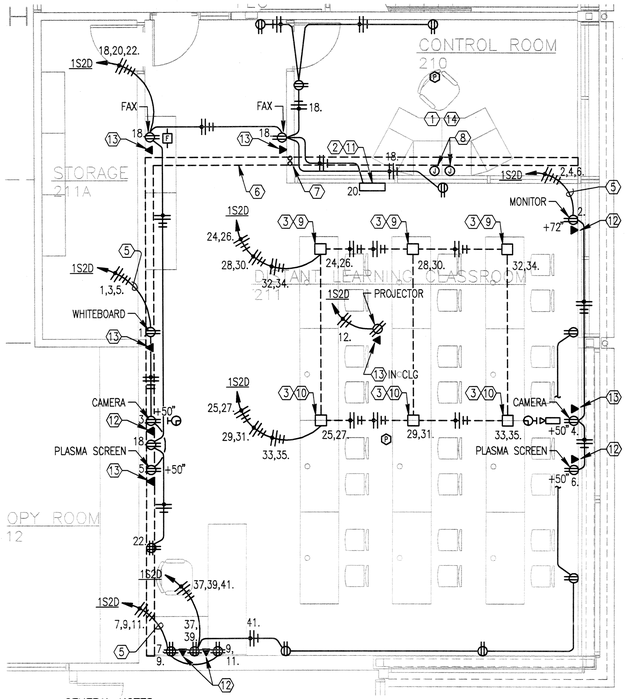

GENERAL NOTES:

1. NORMAL POWER IS NOT BE RUN IN WALKERDUCT.
2. COORDINATE EXACT LOCATION OF ALL DEVICES WITH ARCHITECTURAL.

NOTES:

1. SEE ENLARGED CONSOLE PLAN SHEET 6/E5.03.
2. MOUNT 4-PLEX IN WALLBOX FOR A/V, NETWORK AND POWER BOX TO BE SPI-WSCS-MBD-4.
3. SPIDER MANUFACTURING FLUSH FLOOR BOX. SPI # AFB-301 WITH AFB-301-PB CONCRETE POUR BOX. PROVIDE (2) DUPLEX RECEPTACLES IN EACH BOX AND CONNECT TO CIRCUITING SHOWN, ONE DEDICATED CIRCUIT PER 4-PLEX.
4. SEE ARCHITECTURAL ELEVATIONS FOR MOUNTING HEIGHT OF ALL RECEPTACLES NOTED SERVING SPECIFIC EQUIPMENT (CAMERA, PLASMA, ETC.)
5. ROUTE THROUGH RELAY FOR CRESTON CONTROL. SEE SIGNAL PLAN AND KEYED NOTE 14..
6. PROVIDE WALKER FLUSHDUCT IN FLOOR 2 CELL DUCT SYSTEM. STAGGERED PRESETS 24"OC. WALKER 222 FST FOR A/V WIRING. ARRANGE FOR OFFSETS TO BE UNDER CONSOLE.
7. PROVIDE (2) 2"CONDUITS FROM ABOVE ACCESSIBLE CEILING IN WALL TO DUCT. DRILL FLUSH DUCT COVER AND EXTEND CONDUITS TO DUCT. PROVIDE END BUSHING AT EACH END. ONE CONDUIT TO SERVE EACH CELL.
8. PROVIDE (2) 6"H x 12"W x 4"D JUNCTION BOXES IN WALL AT FLOOR. LOCATE BEHIND CONTROL CONSOLE. PROVIDE SCREW ON PLATE WITH 3" GROMMETED OPENING.
9. PROVIDE (1) 1½"C. TO J-BOX BEHIND CONSOLE FOR A/V AND (1) 1"C. UP TO ABOVE ACCESSIBLE CEILING FOR NETWORK.
10. PROVIDE (1) 1½"C. TO FLOOR BOX NOTED IN NOTE 9 AS SHOWN AND (1) 1"C. UP TO ABOVE ACCESSIBLE CEILING FOR NETWORK.
11. ROUTE (1) 1½"C. TO J-BOX BEHIND CONSOLE AND (2) 1"C. TO ABOVE CEILING FOR NETWORK. DRILL BOX AS REQUIRED FOR CONDUITS.
12. NETWORK ROUGH-IN WITH 2 GANG MUD RING AND (2) 1"C. TO ABOVE ACCESSIBLE CEILING.
13. NETWORK ROUGH-IN WITH 1 GANG MUD RING AND (1) 1"C. TO ABOVE ACCESSIBLE CEILING.
14. PROVIDE (5) 3 POLE RELAYS ABOVE CEILING FOR CRESTON POWER CONTROL. VERIFY COIL VOLTAGE WITH CRESTON CONTROLLER. MOUNT IN NEMA 1 ENCLOSURE.

1 / E5.03 ENLARGED POWER PLAN – DISTANCE LEARNING

SCALE: ¼" = 1'-0"

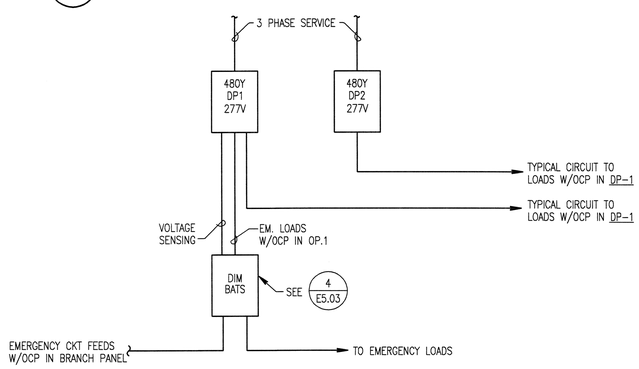

GENERAL NOTES:

1. SEE E5.01 FOR DIMMER SCHEDULES.

2 / E5.03 DIMMER CONTROL CONNECTIONS

SCALE: NONE

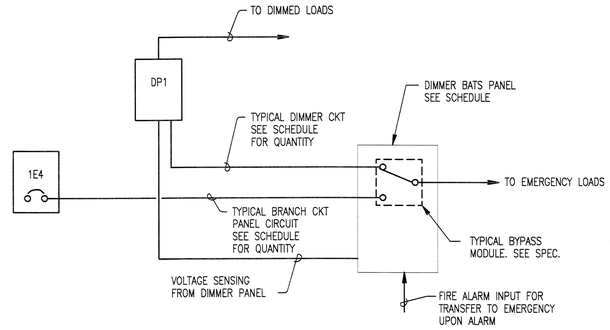

GENERAL NOTES:

1. SEE E5.01 FOR DIMMER SCHEDULES.

4 / E5.03 DIMMER BATS DIAGRAM

SCALE: NONE

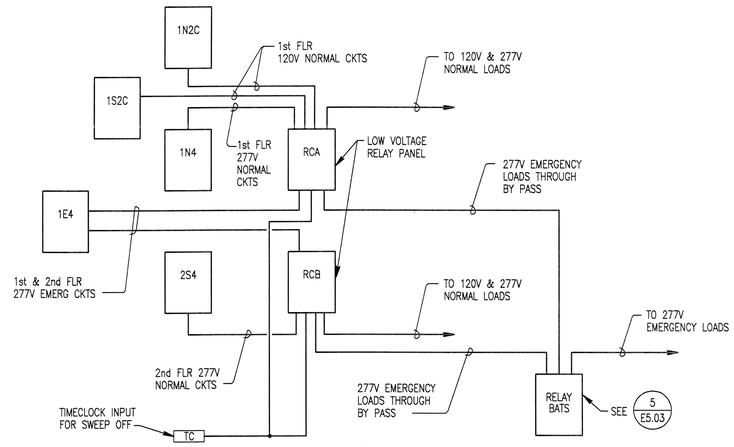

GENERAL NOTES:

1. SEE E5.01 FOR RELAY SCHEDULES.

3 / E5.03 RELAY CONTROL CONNECTIONS

SCALE: NONE

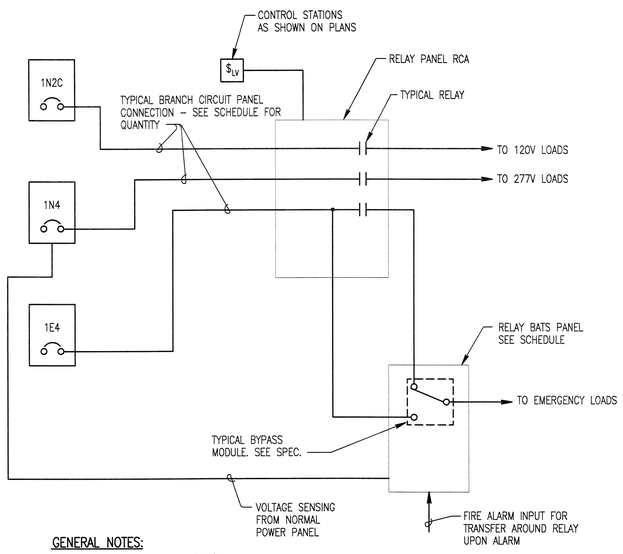

GENERAL NOTES:

1. SEE E5.01 FOR RELAY SCHEDULES.

5 / E5.03 RELAY BATS DIAGRAM

SCALE: NONE

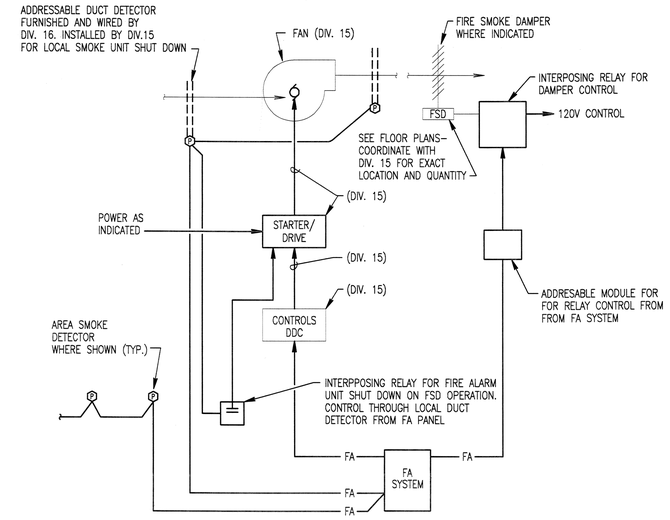

GENERAL NOTES:

1. PROGRAM ADDRESSABLE MODULE AND DAMPER CIRCUIT RELAY FOR 30 SECOND DELAY AFTER UNIT SHUT DOWN UPON ALARM.

5 / E5.03 FSD CONTROL DIAGRAM

SCALE: NONE

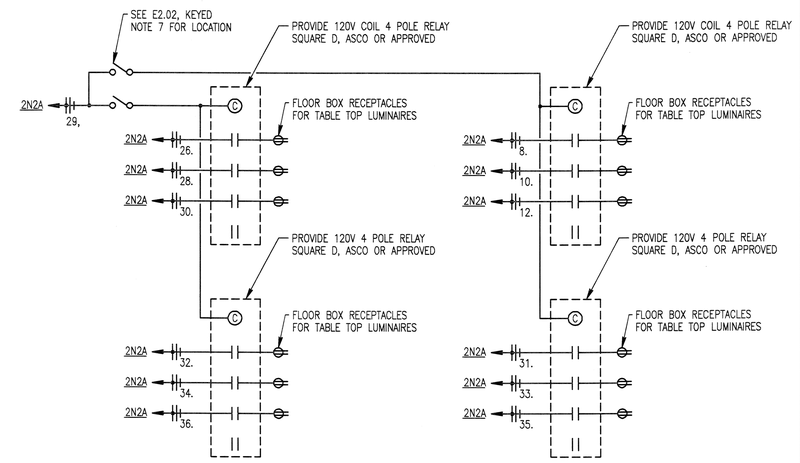

GENERAL NOTES:

1. MOUNT ALL RELAYS ADJACENT TO PANEL 2N2A IN NEMA 1 ENCLOSURE.

6 / E5.03 FLOOR BOX CONTROL DIAGRAM

SCALE: NONE

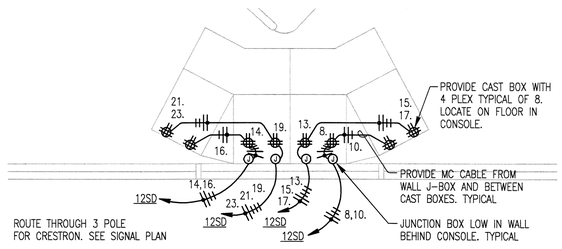

6 / E5.03 ENLARGED CONSOLE PLAN

SCALE: ½" = 1'-0"

DETAILS & ENLARGED PLANS – ELECTRICAL

PCC ROCK CREEK CAMPUS NEW BUILDING

PORTLAND COMMUNITY COLLEGE
ROCK CREEK CAMPUS
17705 NW Springville Road
PORTLAND, OREGON 97229

THOMAS HACKER ARCHITECTS INC
733 SW OAK STREET
PORTLAND, OREGON 97205
(503) 227-1254

PAE CONSULTING ENGINEERS
806 SW THIRD AVENUE
PORTLAND, OREGON 97204
(503) 226-2921

REGISTERED PROFESSIONAL ENGINEER 44775 OREGON July 15, 1999 GRANT R. PARTHEMER 2/14/03
EXPIRES 12-31-04

REVISIONS :

DATE : 02/14/03
SCALE : NONE

DRAWN BY : WBD
JOB NO. : 0115
DWG. NO. E5.03

THOMAS HACKER ARCHITECTS INC.

PANEL: MDP
LOCATION: ELECTRICAL ROOM 130
FED FROM: MDP BUS
DC DEVICE TYPE: Breaker
DEVICE FAMILY: Bolt On
ENCLOSURE: NEMA 1
MOUNTING: Free Standing
VOLTAGE: 480/277
MAINS(A): 1600A MCB
WIRING: 3-Phase 4-Wire
BUS RATING(A): 1600
WITHSTAND(A): 65000
FAULT CURRENT(A) 30995

CUBICLE NO	DESCRIPTION	CONNECTED kVA	DEMAND kVA	DESIGN kVA	DESIGN AMPS	DC DEVICE TRIP SIZE	NOTES
1	PANEL 2S4M	184.41	184.41	184.41	221.81	400	
2	PANEL 1S4	61.37	61.37	67.80	81.55	200	
3	PANEL 1N4	29.41	29.41	36.77	44.22	200	
4	T-S PRI BUS	120.41	76.15	76.98	92.59	175	
5	T-N PRI BUS	86.91	70.51	74.42	89.51	175	
6	ECC-1	362.31	362.31	362.31	435.79	500	
7	ELEVATOR #1	34.97	34.97	43.71	52.58	70	
8	ELEVATOR #2	34.97	34.97	43.71	52.58	70	
9	ATS NORM BUS	30.26	30.26	33.99	40.88	150	
10	SPARE	0.00	0.00	0.00	0.00	100	
11							
12							
13							
14							

ALL CONNECTED	KVA	AMPS	* PHASE TOTALS	VA	AMPS	BUS TOTALS	KVA
TOTAL CONNECTED	941.36	1132.3	* A-N	313788.1	1132.3	CONNECTED	941.36
TOTAL DEMAND	875.78	1053.4	* B-N	313788.1	1132.3	DEMAND	875.78
TOTAL DESIGN	905.89	1089.6	* C-N	313788.1	1132.3	DESIGN	905.89

PANEL: SDP-S
LOCATION: ELECTRICAL ROOM 130
FED FROM: T-S SEC FEED
DC DEVICE TYPE: Breaker
DEVICE FAMILY: Bolt On
ENCLOSURE: NEMA 1
MOUNTING: Surface
VOLTAGE: 208/120
MAINS(A): 400A MCB
WIRING: 3-Phase 4-Wire
BUS RATING(A): 400
WITHSTAND(A): 10000
FAULT CURRENT(A) 6199

CUBICLE NO	DESCRIPTION	CONNECTED kVA	DEMAND kVA	DESIGN kVA	DESIGN AMPS	DC DEVICE TRIP SIZE	NOTES
1	PANEL 1S2A	52.93	38.24	38.45	106.72	200	
2	PANEL 1S2B	19.52	14.76	14.76	40.97	200	
3	PANEL 1S2C	24.97	21.66	22.28	61.85	200	
4	SPARE	0.00	0.00	0.00	0.00	0	
5							
6							
7							

ALL CONNECTED	KVA	AMPS	* PHASE TOTALS	VA	AMPS	BUS TOTALS	KVA
TOTAL CONNECTED	97.39	270.3	* A-N	32463.4	270.3	CONNECTED	120.41
TOTAL DEMAND	64.64	179.4	* B-N	32463.4	270.3	DEMAND	76.15
TOTAL DESIGN	65.47	181.7	* C-N	32463.4	270.3	DESIGN	76.98

PANEL: SDP-N
LOCATION: ELECTRICAL ROOM 132
FED FROM: T-N SEC BUS
DC DEVICE TYPE: Breaker
DEVICE FAMILY: Bolt On
ENCLOSURE: NEMA 1
MOUNTING: Surface
VOLTAGE: 208/120
MAINS(A): 400A MCB
WIRING: 3-Phase 4-Wire
BUS RATING(A): 400
WITHSTAND(A): 10000
FAULT CURRENT(A) 5391

CUBICLE NO	DESCRIPTION	CONNECTED kVA	DEMAND kVA	DESIGN kVA	DESIGN AMPS	DC DEVICE TRIP SIZE	NOTES
1	PANEL 1N2A	47.23	31.55	31.76	88.16	200	
2	PANEL 1N2B	25.32	25.32	25.68	71.29	200	
3	PANEL 1N2C	14.72	14.72	18.12	50.30	200	
4	SPARE	0.00	0.00	0.00	0.00	0	
5							
6							
7							

ALL CONNECTED	KVA	AMPS	* PHASE TOTALS	VA	AMPS	BUS TOTALS	KVA
TOTAL CONNECTED	86.91	241.2	* A-N	28969.7	241.2	CONNECTED	86.91
TOTAL DEMAND	70.51	195.7	* B-N	28969.7	241.2	DEMAND	70.51
TOTAL DESIGN	74.42	206.6	* C-N	28969.7	241.2	DESIGN	74.42

PANEL: 1E4
LOCATION: ELECTRICAL ROOM 130
FED FROM: ATS OUT FEED
DC DEVICE TYPE: Breaker
DEVICE FAMILY: Bolt On
ENCLOSURE: NEMA 1
MOUNTING: Surface
VOLTAGE: 480/277
MAINS(A): 150A MLO
WIRING: 3-Phase 4-Wire
BUS RATING(A): 225
WITHSTAND(A): 25000
FAULT CURRENT(A) 24314

CKT	DESCRIPTION	NOTES	DEMAND CODE	VA	DC AMPS P	PHASE	DC AMPS P	VA	DEMAND CODE	NOTES	DESCRIPTION	CKT
1	EGRESS SOUTH 1ST		ELighting	2331	20 1	A	20 1	3024	ELighting		DIMMER a, b, g, h, i, o, p	2
3	EGRESS SOUTH 1ST		ELighting	2604	20 1	B	20 1	2400	ELighting		DIMMER dd	4
5	EGRESS 2ND		ELighting	1948	20 1	C	20 1	0	SPARE		SPARE	6
7	EGRESS 2ND		ELighting	2724	20 1	A	20 1	0	SPARE		SPARE	8
9	SPARE		SPARE	0	20 1	B	20 1	0	SPARE		SPARE	10
11	SPARE		SPARE	0	20 1	C	20 1	0	SPARE		SPARE	12
13						A						14
15						B						16
17						C						18
19						A						20
21						B						22
23						C						24
25						A	50 3	5167	NONE		T-E PRI BUS	26
27						B	"	5167			"	28
29						C	"	5167			"	30

ALL CONNECTED	KVA	AMPS	* PHASE TOTALS	VA	AMPS	BUS TOTALS	KVA
TOTAL CONNECTED	30.26	36.4	* A-N	13134.2	47.4	CONNECTED	30.26
TOTAL DEMAND	30.26	36.4	* B-N	10080.8	36.4	DEMAND	30.26
TOTAL DESIGN	33.99	40.9	* C-N	7064.8	25.5	DESIGN	33.99

PANEL: 1S4
LOCATION: ELECTRICAL ROOM 130
FED FROM: MDP BUS
DC DEVICE TYPE: Breaker
DEVICE FAMILY: Bolt On
ENCLOSURE: NEMA 1
MOUNTING: Surface
VOLTAGE: 480/277
MAINS(A): 225A MLO
WIRING: 3-Phase 4-Wire
BUS RATING(A): 225
WITHSTAND(A): 65000
FAULT CURRENT(A) 28876

CKT	DESCRIPTION	NOTES	DEMAND CODE	VA	DC AMPS P	PHASE	DC AMPS P	VA	DEMAND CODE	NOTES	DESCRIPTION	CKT
1	SOUTH		NLighting	2412	20 1	A	20 3	3900	HVAC Systems		CHWP-3	2
3	SOUTH		NLighting	2840	20 1	B	"	3900			"	4
5	SOUTH		NLighting	1434	20 1	C	"	3900			"	6
7	CHWP-2		HVAC Systems	2107	20 3	A	20 3	3900	HVAC Systems		CHWP-4	8
9	"			2107	"	B	"	3900			"	10
11	"			2107	"	C	"	3900			"	12
13	CHWP-1		HVAC Systems	2107	20 3	A	20 1	1200	NLighting		SOUTH EAST	14
15	"			2107	"	B	20 1	1200	NLighting		SOUTH EAST	16
17	"			2107	"	C	20 1	0	SPARE		SPARE	18
19	SPARE		SPARE	0	20 1	A						20
21	SPARE		SPARE	0	20 1	B						22
23	SPARE		SPARE	0	20 1	C						24
25						A						26
27						B						28
29						C						30

ALL CONNECTED	KVA	AMPS	* PHASE TOTALS	VA	AMPS	BUS TOTALS	KVA
TOTAL CONNECTED	44.74	53.8	* A-N	15478.4	55.9	CONNECTED	61.37
TOTAL DEMAND	44.74	53.8	* B-N	15893.4	57.4	DEMAND	61.37
TOTAL DESIGN	46.94	56.5	* C-N	13379.7	48.3	DESIGN	67.80

FEED THRU LUGS

PANEL: 1N4
LOCATION: ELECTRICAL ROOM 142
FED FROM: MDP BUS
DC DEVICE TYPE: Breaker
DEVICE FAMILY: Bolt On
ENCLOSURE: NEMA 1
MOUNTING: Surface
VOLTAGE: 480/277
MAINS(A): 100A MLO
WIRING: 3-Phase 4-Wire
BUS RATING(A): 100
WITHSTAND(A): 14000
FAULT CURRENT(A) 10227

CKT	DESCRIPTION	NOTES	DEMAND CODE	VA	DC AMPS P	PHASE	DC AMPS P	VA	DEMAND CODE	NOTES	DESCRIPTION	CKT
1	BOOKSTORE		NLighting	2400	20 1	A	20 1	2866	NLighting		NORTH 1ST FLOOR	2
3	BOOKSTORE		NLighting	1960	20 1	B	20 1	2488	NLighting		NORTH 1ST FLOOR	4
5	EXTERIOR		NLighting	844	20 1	C	20 1	1764	NLighting		SOUTH 1ST FLOOR	6
7	INVERTER		NLighting	10000	45 1	A	20 1	3372	NLighting		SOUTH 1ST FLOOR	8
9	SPARE		SPARE	0	20 1	B	20 1	0	SPARE		SPARE	10
11	SPARE		SPARE	0	20 1	C	20 1	0	SPARE		SPARE	12
13						A						14
15						B						16
17						C						18
19						A						20
21						B						22
23						C						24
25						A						26
27						B						28
29						C						30

ALL CONNECTED	KVA	AMPS	* PHASE TOTALS	VA	AMPS	BUS TOTALS	KVA
TOTAL CONNECTED	25.39	30.5	* A-N	18404.8	66.4	CONNECTED	29.41
TOTAL DEMAND	25.39	30.5	* B-N	4448.0	16.1	DEMAND	29.41
TOTAL DESIGN	31.73	38.2	* C-N	2608.0	9.4	DESIGN	36.77

FEED THRU LUGS

PANEL: 1E2
LOCATION: ELECTRICAL ROOM 130
FED FROM: T-E SEC FEED
DC DEVICE TYPE: Breaker
DEVICE FAMILY: Bolt On
ENCLOSURE: NEMA 1
MOUNTING: Surface
VOLTAGE: 208/120
MAINS(A): 100A MCB
WIRING: 3-Phase 4-Wire
BUS RATING(A): 100
WITHSTAND(A): 10000
FAULT CURRENT(A) 1853

CKT	DESCRIPTION	NOTES	DEMAND CODE	VA	DC AMPS P	PHASE	DC AMPS P	VA	DEMAND CODE	NOTES	DESCRIPTION	CKT
1	FIRE ALARM		Life Safety	300	20 1	A	20 1	1400	HVAC Systems		FIRE SMOKE DAMPERS	2
3	NAC PANEL		Life Safety	300	20 1	B	20 1	100	HVAC Systems		FIRE SMOKE DAMPERS	4
5	SPARE		SPARE	0	20 1	C	20 1	0	SPARE		SPARE	6
7	IT ROOM 131 RACKS		ERecepticles	360	20 1	A	20 1	360	ERecepticles		IT ROOM 139 RACKS	8
9	IT ROOM 131 RACKS		ERecepticles	360	20 1	B	20 1	360	ERecepticles		IT ROOM 139 RACKS	10
11	IT ROOM 131 RACKS		ERecepticles	360	20 1	C	20 1	360	ERecepticles		IT ROOM 139 RACKS	12
13	RM 150 FLOOR BOX		ERecepticles	900	20 1	A	20 1	300	EEquipment		SECURITY PANEL	14
15	RM 150 FLOOR BOX		ERecepticles	900	20 1	B	20 1	360	ERecepticles		RM 150	16
17	PROJECTOR RM 150		EEquipment	500	20 1	C	20 1	360	ERecepticles		RM 150 FLOOR BOXES	18
19	PROJECTOR RM 150		EEquipment	500	20 1	A	20 1	360	ERecepticles		IT ROOM 228 RACKS	20
21	RM 150 FLOOR BOX		ERecepticles	1200	20 1	B	20 1	360	ERecepticles		IT ROOM 228 RACKS	22
23	PROJECTOR RM 150		EEquipment	500	20 1	C	20 1	360	ERecepticles		IT ROOM 228 RACKS	24
25	IT ROOM 237 RACKS		ERecepticles	360	20 1	A	20 1	360	ERecepticles		IT ROOM 229 RACKS	26
27	IT ROOM 237 RACKS		ERecepticles	360	20 1	B	20 1	360	ERecepticles		IT ROOM 229 RACKS	28
29	IT ROOM 237 RACKS		ERecepticles	360	20 1	C	20 1	360	ERecepticles		IT ROOM 229 RACKS	30
31	GEN. BLOCK HTR		NEquipment	500	20 1	A	20 1	500	NEquipment		MOTORIZED SCREEN	32
33	GEN. BATTER CHGR		NEquipment	500	20 1	B	20 1	500	NEquipment		MOTORIZED SCREEN	34
35	SPARE		SPARE	0	20 1	C	20 1	500	NEquipment		MOTORIZED SCREEN	36
37	SPARE		SPARE	0	20 1	A	20 1	0	SPARE		SPARE	38
39	SPARE		SPARE	0	20 1	B	20 1	0	SPARE		SPARE	40
41	SPARE		SPARE	0	20 1	C	20 1	0	SPARE		SPARE	42

ALL CONNECTED	KVA	AMPS	* PHASE TOTALS	VA	AMPS	BUS TOTALS	KVA
TOTAL CONNECTED	15.50	43.0	* A-N	6191.0	51.6	CONNECTED	15.50
TOTAL DEMAND	15.50	43.0	* B-N	5654.5	47.1	DEMAND	15.50
TOTAL DESIGN	15.50	43.0	* C-N	3656.5	30.4	DESIGN	15.50

PANEL: 2S4
LOCATION: ELEC. CLOSET 226
FED FROM: PANEL 1S4
DC DEVICE TYPE: Breaker
DEVICE FAMILY: Bolt On
ENCLOSURE: NEMA 1
MOUNTING: Surface
VOLTAGE: 480/277
MAINS(A): 225A MLO
WIRING: 3-Phase 4-Wire
BUS RATING(A): 225
WITHSTAND(A): 25000
FAULT CURRENT(A) 18943

CKT	DESCRIPTION	NOTES	DEMAND CODE	VA	DC AMPS P	PHASE	DC AMPS P	VA	DEMAND CODE	NOTES	DESCRIPTION	CKT
1	SOUTH 2ND FLOOR		NLighting	2640	20 1	A	20 1	2696	NLighting		SOUTH 2ND FLOOR	2
3	SOUTH 2ND FLOOR		NLighting	2720	20 1	B	20 1	3444	NLighting		SOUTH 2ND FLOOR	4
5	SOUTH 2ND FLOOR		NLighting	2956	20 1	C	20 1	2592	NLighting		SOUTH 2ND FLOOR	6
7	SPARE		SPARE	0	20 1	A	20 1	0	SPARE		SPARE	8
9	SPARE		SPARE	0	20 1	B	20 1	0	SPARE		SPARE	10
11	SPARE		SPARE	0	20 1	C	20 1	0	SPARE		SPARE	12
13						A						14
15						B						16
17						C						18
19						A						20
21						B						22
23						C						24
25						A						26
27						B						28
29						C						30

ALL CONNECTED	KVA	AMPS	* PHASE TOTALS	VA	AMPS	BUS TOTALS	KVA
TOTAL CONNECTED	17.05	20.5	* A-N	5336.0	19.3	CONNECTED	17.05
TOTAL DEMAND	17.05	20.5	* B-N	6164.0	22.2	DEMAND	17.05
TOTAL DESIGN	21.31	25.6	* C-N	5548.0	20.0	DESIGN	21.31

PANEL: 2N4
LOCATION: MECHANICAL ROOM 234
FED FROM: PANEL 1N4
DC DEVICE TYPE: Breaker
DEVICE FAMILY: Bolt On
ENCLOSURE: NEMA 1
MOUNTING: Surface
VOLTAGE: 480/277
MAINS(A): 225A MLO
WIRING: 3-Phase 4-Wire
BUS RATING(A): 225
WITHSTAND(A): 14000
FAULT CURRENT(A) 8694

CKT	DESCRIPTION	NOTES	DEMAND CODE	VA	DC AMPS P	PHASE	DC AMPS P	VA	DEMAND CODE	NOTES	DESCRIPTION	CKT
1	NORTH 2ND FLOOR		NLighting	3332	20 1	A						2
3	NORTH 2ND FLOOR		NLighting	720	20 1	B						4
5						C						6
7						A						8
9						B						10
11						C						12
13						A						14
15						B						16
17						C						18
19						A						20
21						B						22
23						C						24
25						A						26
27						B						28
29						C						30

ALL CONNECTED	KVA	AMPS	* PHASE TOTALS	VA	AMPS	BUS TOTALS	KVA
TOTAL CONNECTED	4.05	4.9	* A-N	3332.0	12.0	CONNECTED	4.05
TOTAL DEMAND	4.05	4.9	* B-N	720.0	2.6	DEMAND	4.05
TOTAL DESIGN	5.07	6.1	* C-N	0.0	0.0	DESIGN	5.07

PANEL: 1S2A
LOCATION: ELECTRICAL ROOM 130
FED FROM: PANEL SDP-S
DC DEVICE TYPE: Breaker
DEVICE FAMILY: Bolt On
ENCLOSURE: NEMA 1
MOUNTING: Surface
VOLTAGE: 208/120
MAINS(A): 225A MLO
WIRING: 3-Phase 4-Wire
BUS RATING(A): 225
WITHSTAND(A): 10000
FAULT CURRENT(A) 5761

CKT	DESCRIPTION	NOTES	DEMAND CODE	VA	DC AMPS P	PHASE	DC AMPS P	VA	DEMAND CODE	NOTES	DESCRIPTION	CKT
1	ECC-1 HEAT TAPE		HVAC Systems	1000	20 1	A	20 1	250	Electric Hea		CUH-2	2
3	ECC-1 CONTROL		Mech Control	120	20 1	B	20 1	360	NLighting		ELEVATOR 2 PIT	4
5	ELEVATOR 2 PIT		NRecepticles	180	20 1	C	20 1	720	NRecepticles		RM 127,127B,127C	6
7	RM 128-131		NRecepticles	900	20 1	A	20 1	900	NRecepticles		RM 127,127C	8
9	STORAGE 132		NRecepticles	720	20 1	B	20 1	500	NEquipment		GARBAGE DIS.	10
11	MOTORIZED DOOR X134B		NEquipment	500	20 1	C	20 1	720	NRecepticles		RM 127D	12
13	RM 127,127A		NRecepticles	900	20 1	A	20 1	720	NRecepticles		RM 127B,127C	14
15	RM 122,127A		NRecepticles	1080	20 1	B	20 1	900	NRecepticles		RM 119,127B	16
17	MOTORIZED SCREEN 122		NEquipment	500	20 1	C	20 1	500	NEquipment		GARBAGE DIS. 119	18
19	PROJECTOR 122		NEquipment	500	20 1	A	20 1	720	NRecepticles		RM 122,125,HALL 123	20
21	RM 121,122		NRecepticles	900	20 1	B	20 1	720	NRecepticles		RM 125 FLOOR BOX	22
23	RM 127		NRecepticles	720	20 1	C	20 1	720	NRecepticles		RM 125 FLOOR BOX	24
25	RM 118,119		NRecepticles	720	20 1	A	20 1	720	NRecepticles		RM 121,HALL 123	26
27	RM 117,118		NRecepticles	540	20 1	B	20 1	720	NRecepticles		RM 125 PODIUM	28
29	RM 116,117		NRecepticles	720	20 1	C	20 1	720	NRecepticles		RM 125 FLOOR BOX	30
31	MOTORIZED SCREEN 125		NEquipment	500	20 1	A	20 1	540	NRecepticles		RM 126	32
33	COMMONS 134		NRecepticles	720	20 1	B	20 1	720	NRecepticles		RM125	34
35	CAREER CENTER 126		NRecepticles	720	20 1	C	20 1	500	NEquipment		PROJECTOR 125	36
37	SPARE		SPARE	0	20 1	A	20 1	0	SPARE		SPARE	38
39	SPARE		SPARE	0	20 1	B	20 1	0	SPARE		SPARE	40
41	SPARE		SPARE	0	20 1	C	20 1	0	SPARE		SPARE	42

ALL CONNECTED	KVA	AMPS	* PHASE TOTALS	VA	AMPS	BUS TOTALS	KVA
TOTAL CONNECTED	23.55	65.4	* A-N	8347.1	69.5	CONNECTED	52.93
TOTAL DEMAND	19.37	53.8	* B-N	7987.5	66.5	DEMAND	38.24
TOTAL DESIGN	19.45	54.0	* C-N	7214.3	60.1	DESIGN	38.45

FEED THRU LUGS

PANEL: 1S2B
LOCATION: ELECTRICAL ROOM 130
FED FROM: PANEL SDP-S
DC DEVICE TYPE: Breaker
DEVICE FAMILY: Bolt On
ENCLOSURE: NEMA 1
MOUNTING: Surface
VOLTAGE: 208/120
MAINS(A): 225A MLO
WIRING: 3-Phase 4-Wire
BUS RATING(A): 225
WITHSTAND(A): 10000
FAULT CURRENT(A) 5761

CKT	DESCRIPTION	NOTES	DEMAND CODE	VA	DC AMPS P	PHASE	DC AMPS P	VA	DEMAND CODE	NOTES	DESCRIPTION	CKT
1	RM 120,124,126		NRecepticles	900	20 1	A	20 1	720	NRecepticles	RM 103,134	COMMONS/REGIST	2
3	RM 125,126		NRecepticles	900	20 1	B	20 1	720	NRecepticles		CAREER CENTER 126	4
5	RM 126		NRecepticles	900	20 1	C	20 1	720	NRecepticles		COMMONS 134	6
7	RM 115,116		NRecepticles	540	20 1	A	20 1	1000	NRecepticles		COPIER 113	8
9	RM 114,115		NRecepticles	540	20 1	B	20 1	720	NRecepticles		RM 113	10
11	RM 113,114		NRecepticles	540	20 1	C	20 1	540	NRecepticles		RM 112	12
13	ADMISSIONS 110		NRecepticles	1080	20 1	A	20 1	360	NRecepticles		ADMISSIONS 110	14
15	ADMISSIONS 110		NRecepticles	720	20 1	B	20 1	1080	NRecepticles		ADMISSIONS 110	16
17	RM 112		NRecepticles	540	20 1	C	20 1	1080	NRecepticles		ADMISSIONS 110	18
19	RM 104,105		NRecepticles	720	20 1	A	20 1	720	NRecepticles		RM 103,106	20
21	RM 105,108,110		NRecepticles	720	20 1	B	20 1	540	NRecepticles		RM 107	22
23	RM 104,109		NRecepticles	720	20 1	C	20 1	540	NRecepticles		RM 106	24
25	RM 102		NRecepticles	540	20 1	A	20 1	360	NRecepticles		IT ROOM 131	26
27	RM 102		NRecepticles	540	20 1	B	20 1	360	NRecepticles		IT ROOM 131	28
29	SPARE		SPARE	0	20 1	C	20 1	360	NRecepticles		IT ROOM 131	30
31	SPARE		SPARE	0	20 1	A	20 1	0	SPARE		SPARE	32
33	SPARE		SPARE	0	20 1	B	20 1	0	SPARE		SPARE	34
35	SPARE		SPARE	0	20 1	C	20 1	0	SPARE		SPARE	36
37						A						38
39						B						40
41						C						42

ALL CONNECTED	KVA	AMPS	* PHASE TOTALS	VA	AMPS	BUS TOTALS	KVA
TOTAL CONNECTED	19.52	54.2	* A-N	6988.6	57.4	CONNECTED	19.52
TOTAL DEMAND	14.76	41.0	* B-N	6702.2	55.8	DEMAND	14.76
TOTAL DESIGN	14.76	41.0	* C-N	5940.0	49.5	DESIGN	14.76

FEED THRU LUGS

PANEL: 1S2C
LOCATION: ELECTRICAL ROOM 130
FED FROM: PANEL SDP-S
DC DEVICE TYPE: Breaker
DEVICE FAMILY: Bolt On
ENCLOSURE: NEMA 1
MOUNTING: Surface
VOLTAGE: 208/120
MAINS(A): 225A MLO
WIRING: 3-Phase 4-Wire
BUS RATING(A): 225
WITHSTAND(A): 10000
FAULT CURRENT(A) 5761

CKT	DESCRIPTION	NOTES	DEMAND CODE	VA	DC AMPS P	PHASE	DC AMPS P	VA	DEMAND CODE	NOTES	DESCRIPTION	CKT
1	SP-2		Elevators	1180	20 1	A	20 1	360	NRecepticles		CONTROL ROOM 210	2
3	SPARE		SPARE	0	20 1	B	20 1	360	NRecepticles		CONTROL ROOM 210	4
5	SPARE		SPARE	0	20 1	C	20 1	360	NRecepticles		CONTROL ROOM 210	6
7	DISTANCE LEARN. 211		NRecepticles	900	20 1	A	20 1	360	NRecepticles		CONTROL ROOM 210	8
9	DISTANCE LEARN. 211		NRecepticles	900	20 1	B	20 1	360	NRecepticles		CONTROL ROOM 210	10
11	DISTANCE LEARN. 211		NRecepticles	900	20 1	C	20 1	360	NRecepticles		CONTROL ROOM 210	12
13	DISTANCE LEARN. 211		NRecepticles	360	20 1	A	20 1	0	SPARE		SPARE	14
15	DISTANCE LEARN. 211		NRecepticles	360	20 1	B	20 1	0	SPARE		SPARE	16
17	DISTANCE LEARN. 211		NRecepticles	360	20 1	C	20 1	0	SPARE		SPARE	18
19	DISTANCE LEARN. 211		NRecepticles	360	20 1	A						20
21	DISTANCE LEARN. 211		NRecepticles	360	20 1	B						22
23	DISTANCE LEARN. 211		NRecepticles	360	20 1	C						24
25	STAFF 119 COFFEE		NRecepticles	500	20 1	A						26
27	STAFF 119 MICROWAVE		NEquipment	1500	20 1	B						28
29	STAFF 119		NRecepticles	500	20 1	C						30
31	STAFF 119 REFRIG.		NEquipment	500	20 1	A						32
33	SPARE		SPARE	0	20 1	B						34
35	SPARE		SPARE	0	20 1	C						36
37						A						38
39						B						40
41						C						42

ALL CONNECTED	KVA	AMPS	* PHASE TOTALS	VA	AMPS	BUS TOTALS	KVA
TOTAL CONNECTED	11.19	31.1	* A-N	4515.8	37.6	CONNECTED	24.97
TOTAL DEMAND	11.19	31.1	* B-N	3836.4	31.9	DEMAND	21.66
TOTAL DESIGN	11.19	31.1	* C-N	2840.0	23.6	DESIGN	22.28

FEED THRU LUGS

PANEL SCHEDULES ELECTRICAL

PCC ROCK CREEK CAMPUS NEW BUILDING

PORTLAND COMMUNITY COLLEGE
ROCK CREEK CAMPUS
17705 NW Springville Road
PORTLAND, OREGON 97229

THOMAS HACKER ARCHITECTS INC
733 SW OAK STREET
PORTLAND, OREGON 97205
(503) 227-1254

PAE CONSULTING ENGINEERS
808 SW THIRD AVENUE
PORTLAND, OREGON 97204
(503) 226-2521

REGISTERED PROFESSIONAL ENGINEER 34775 OREGON JULY 13, 1995 GRANT R. PARTHEMER 3-19-03

EXPIRES 12-31-04

REVISIONS : 1 03/21/03

DATE : 02/14/03
SCALE : NONE

DRAWN BY : WBD
JOB NO. : 0115
DWG. NO. E5.04

THOMAS HACKER ARCHITECTS INC.

PANEL: 2S2A   OC DEVICE TYPE: Breaker   ENCLOSURE: NEMA 1   MAINS(A): 225A MLO   BUS RATING(A): 225
LOCATION: ELEC. CLOSET 226   DEVICE FAMILY: Bolt On   MOUNTING: Surface   WIRING: 3-Phase 4-Wire   WITHSTAND(A): 10000
FED FROM: PANEL 1S2A   VOLTAGE: 208/120   FAULT CURRENT(A) 4705

CKT	DESCRIPTION	NOTES	DEMAND CODE	VA	OC AMPS P	PHASE	OC AMPS P	VA	DEMAND CODE	NOTES	DESCRIPTION	CKT
1	B-1		NEquipment	2400	30 1	A	20 1	700	NEquipment		EF-2	2
3	B-2		NEquipment	2400	30 1	B	20 1	500	NLighting		ELEVATOR CAB	4
5	B-3		NEquipment	2400	30 1	C	20 1	720	NReceptacles		CIRCULATION DESK	6
7	RM 225		NReceptacles	720	20 1	A	20 1	540	NReceptacles		RM 230	8
9	RM 224, 225		NReceptacles	720	20 1	B	20 1	540	NReceptacles		MAIL RM 221	10
11	RM 223		NReceptacles	540	20 1	C	20 1	720	NReceptacles		RM 223	12
13	MAIL RM 221		NReceptacles	720	20 1	A	20 1	720	NReceptacles		RM 219	14
15	RM 219		NReceptacles	720	20 1	B	20 1	720	NReceptacles		RM 219	16
17	RM 219		NReceptacles	720	20 1	C	20 1	720	NReceptacles		RM 230	18
19	RM 229		NReceptacles	720	20 1	A	20 1	720	NReceptacles		RM 228	20
21	RM 227, 229, 230		NReceptacles	720	20 1	B	20 1	900	NReceptacles		RM 227	22
23	RM 229		NReceptacles	540	20 1	C	20 1	500	NReceptacles		GARBAGE DIS. 227	24
25	RM 216, 219		NReceptacles	720	20 1	A	20 1	900	NReceptacles		A/V DESK, RM 227	26
27	RM 218, 219		NReceptacles	900	20 1	B	20 1	0	SPARE		SPARE	28
29	RM 217, 218		NReceptacles	900	20 1	C	20 1	0	SPARE		SPARE	30
31	RM 223 PARTITION		NReceptacles	720	20 1	A	20 1	720	NReceptacles		RM 217	32
33	RM 223 PARTITION		NReceptacles	720	20 1	B	20 1	720	NReceptacles		RM 214, 216	34
35	RM 214, 215		NReceptacles	1080	20 1	C	20 1	720	NReceptacles		PERIODICAL RM 214	36
37	SPARE		SPARE	0	20 1	A	20 1	0	SPARE		SPARE	38
39	SPARE		SPARE	0	20 1	B	20 1	0	SPARE		SPARE	40
41	SPARE		SPARE	0	20 1	C	20 1	0	SPARE		SPARE	42

ALL CONNECTED	KVA	AMPS	* PHASE TOTALS	VA	AMPS	BUS TOTALS	KVA
TOTAL CONNECTED	29.38	81.6	* A-N	10291.5	85.7	CONNECTED	29.38
TOTAL DEMAND	23.87	66.3	* B-N	9537.0	79.4	DEMAND	23.87
TOTAL DESIGN	23.99	66.6	* C-N	9552.9	79.5	DESIGN	23.99

PANEL: 2S2C   OC DEVICE TYPE: Breaker   ENCLOSURE: NEMA 1   MAINS(A): 225A MLO   BUS RATING(A): 225
LOCATION: ELEC. CLOSET 226   DEVICE FAMILY: Bolt On   MOUNTING: Surface   WIRING: 3-Phase 4-Wire   WITHSTAND(A): 10000
FED FROM: PANEL 1S2C   VOLTAGE: 208/120   FAULT CURRENT(A) 4705

CKT	DESCRIPTION	NOTES	DEMAND CODE	VA	OC AMPS P	PHASE	OC AMPS P	VA	DEMAND CODE	NOTES	DESCRIPTION	CKT
1	DL TRACK		NLighting	1800	20 1	A	20 1	720	NReceptacles		IT ROOM 228	2
3	AHU-1 LTG		NLighting	750	20 1	B	20 1	720	NReceptacles		IT ROOM 228	4
5	AHU-1		NReceptacles	360	20 1	C	20 1	720	NReceptacles		IT ROOM 228	6
7	GWH-1		NEquipment	360	20 1	A	20 1	180	NReceptacles		ELEVATOR MACHINE RM	8
9	RHWP-1		NEquipment	360	20 1	B	20 1	720	NReceptacles		STAFF 227	10
11	SPARE		SPARE	0	20 1	C	20 1	500	NReceptacles		GARBAGE DIS. 227	12
13	PERIODICAL RM 214		NReceptacles	1080	20 1	A	20 1	720	NReceptacles		RM 213	14
15	COPIER RM 212		Copiers	1000	20 1	B	20 1	720	NReceptacles		COPY RM 212, RM 213	16
17	COPIER RM 212		Copiers	1000	20 1	C	20 1	720	NReceptacles		COPY RM 212, STAIR	18
19	COMPUTER WORKRM		NReceptacles	720	20 1	A	20 1	0	SPARE		SPARE	20
21	COMPUTER WORKRM		NReceptacles	720	20 1	B	20 1	0	SPARE		SPARE	22
23	SPARE		SPARE	0	20 1	C	20 1	0	SPARE		SPARE	24
25						A						26
27						B						28
29						C						30
31						A						32
33						B						34
35						C						36
37						A						38
39						B						40
41						C						42

ALL CONNECTED	KVA	AMPS	* PHASE TOTALS	VA	AMPS	BUS TOTALS	KVA
TOTAL CONNECTED	13.78	38.3	* A-N	5542.0	46.1	CONNECTED	13.78
TOTAL DEMAND	13.78	38.3	* B-N	4964.0	41.3	DEMAND	13.78
TOTAL DESIGN	14.41	40.0	* C-N	3286.0	27.4	DESIGN	14.41

PANEL: 2S4M   OC DEVICE TYPE: Breaker   ENCLOSURE: NEMA 1   MAINS(A): 400A MLO   BUS RATING(A): 400
LOCATION: BOILER ROOM 224   DEVICE FAMILY: Bolt On   MOUNTING: Surface   WIRING: 3-Phase 4-Wire   WITHSTAND(A): 65000
FED FROM: MDP BUS   VOLTAGE: 480/277   FAULT CURRENT(A) 25669

CKT	DESCRIPTION	NOTES	DEMAND CODE	VA	OC AMPS P	PHASE	OC AMPS P	VA	DEMAND CODE	NOTES	DESCRIPTION	CKT
1	AHU-1 SUPPLY		HVAC Systems	18033	100 3	A	70 3	11100	HVAC Systems		AHU-2 SUPPLY	2
3	''			18033	''	B	''	11100			''	4
5	''			18033	''	C	''	11100			''	6
7	AHU-1 RETURN		HVAC Systems	5700	40 3	A	25 3	3900	HVAC Systems		AHU-2 RETURN	8
9	''			5700	''	B	''	3900			''	10
11	''			5700	''	C	''	3900			''	12
13	AHU-3 SUPPLY		HVAC Systems	11100	70 3	A	20 3	443	HVAC Systems		HWP-1	14
15	''			11100	''	B	''	443			''	16
17	''			11100	''	C	''	443			''	18
19	AHU-3 RETURN		HVAC Systems	3900	25 3	A	20 3	443	HVAC Systems		HWP-2	20
21	''			3900	''	B	''	443			''	22
23	''			3900	''	C	''	443			''	24
25	HWP-3		HVAC Systems	443	20 3	A	20 3	3050	HVAC Systems		HWP-4	26
27	''			443	''	B	''	3050			''	28
29	''			443	''	C	''	3050			''	30
31	HWP-6		HVAC Systems	307	20 3	A	20 3	3050	HVAC Systems		HWP-5	32
33	''			307	''	B	''	3050			''	34
35	''			307	''	C	''	3050			''	36
37	SPARE		SPARE	0	20 1	A	20 1	0	SPARE		SPARE	38
39	SPARE		SPARE	0	20 1	B	20 1	0	SPARE		SPARE	40
41	SPARE		SPARE	0	20 1	C	20 1	0	SPARE		SPARE	42

ALL CONNECTED	KVA	AMPS	* PHASE TOTALS	VA	AMPS	BUS TOTALS	KVA
TOTAL CONNECTED	184.41	221.8	* A-N	61470.0	221.8	CONNECTED	184.41
TOTAL DEMAND	184.41	221.8	* B-N	61470.0	221.8	DEMAND	184.41
TOTAL DESIGN	184.41	221.8	* C-N	61470.0	221.8	DESIGN	184.41

PANEL: 1N2A   OC DEVICE TYPE: Breaker   ENCLOSURE: NEMA 1   MAINS(A): 225A MLO   BUS RATING(A): 225
LOCATION: ELECTRICA ROOM 132   DEVICE FAMILY: Bolt On   MOUNTING: Surface   WIRING: 3-Phase 4-Wire   WITHSTAND(A): 10000
FED FROM: PANEL SDP-N   VOLTAGE: 208/120   FAULT CURRENT(A) 5102

CKT	DESCRIPTION	NOTES	DEMAND CODE	VA	OC AMPS P	PHASE	OC AMPS P	VA	DEMAND CODE	NOTES	DESCRIPTION	CKT
1	CUH-1		Electric Hea	250	20 1	A	20 1	360	NLighting		ELEVATOR 1 PIT	2
3	UH-1		Electric Hea	530	20 1	B	20 1	500	NLighting		ELEVATOR CAB	4
5	IT ROOM 139		NReceptacles	360	20 1	C	20 1	180	NReceptacles		ELEVATOR 1 PIT	6
7	IT ROOM 139		NReceptacles	360	20 1	A	20 1	0	SPARE		SPARE	8
9	IT ROOM 139		NReceptacles	360	20 1	B	20 1	0	SPARE		SPARE	10
11	IT ROOM 139		NReceptacles	360	20 1	C	20 1	0	SPARE		SPARE	12
13	STORAGE 138		NReceptacles	360	20 1	A	20 1	540	NReceptacles		RM 142, 146	14
15	CORR 140		NReceptacles	360	20 1	B	20 1	1000	NReceptacles		GARBAGE DIS./INSTA	16
17	DISPLAY WINDOW		NReceptacles	360	20 1	C	20 1	540	NReceptacles		RM 144	18
19	DISPLAY WINDOW		NReceptacles	360	20 1	A	20 1	720	NReceptacles		RM 153, 155	20
21	SPARE		SPARE	0	20 1	B	20 1	720	NReceptacles		RECEPTION HALL 153	22
23	SPARE		SPARE	0	20 1	C	20 1	180	NReceptacles		ELEVATOR MACHINE RM	24
25	MEN'S 148		NReceptacles	360	20 1	A	20 1	720	NReceptacles		RM 135, 136	26
27	WOMEN'S 147		NReceptacles	360	20 1	B	20 1	720	NReceptacles		RM 135	28
29	CLOCK PROG.		NEquipment	500	20 1	C	20 1	720	NReceptacles		CASH REG. 136	30
31	COOLERS RM 135		NReceptacles	1000	20 1	A	20 1	720	NReceptacles		OFFICE 143	32
33	RM 135		NReceptacles	540	20 1	B	20 1	720	NReceptacles		RM 136	34
35	RM 136		NReceptacles	540	20 1	C	20 1	360	NReceptacles		CASH RM 145	36
37	SPARE		SPARE	0	20 1	A	20 1	0	SPARE		SPARE	38
39	SPARE		SPARE	0	20 1	B	20 1	0	SPARE		SPARE	40
41	SPARE		SPARE	0	20 1	C	20 1	0	SPARE		SPARE	42

ALL CONNECTED	KVA	AMPS	* PHASE TOTALS	VA	AMPS	BUS TOTALS	KVA
TOTAL CONNECTED	15.59	43.3	* A-N	5726.9	47.7	CONNECTED	47.23
TOTAL DEMAND	13.83	38.4	* B-N	5770.9	48.1	DEMAND	31.55
TOTAL DESIGN	14.04	39.0	* C-N	4098.3	34.1	DESIGN	31.76

FEED THRU LUGS

PANEL: 1N2B   OC DEVICE TYPE: Breaker   ENCLOSURE: NEMA 1   MAINS(A): 225A MLO   BUS RATING(A): 225
LOCATION: ELECTRICAL ROOM 132   DEVICE FAMILY: Bolt On   MOUNTING: Surface   WIRING: 3-Phase 4-Wire   WITHSTAND(A): 10000
FED FROM: PANEL SDP-N   VOLTAGE: 208/120   FAULT CURRENT(A) 5102

CKT	DESCRIPTION	NOTES	DEMAND CODE	VA	OC AMPS P	PHASE	OC AMPS P	VA	DEMAND CODE	NOTES	DESCRIPTION	CKT
1	DRAPERY MOTOR 155		NEquipment	500	20 1	A	20 1	500	NEquipment		COFFEE MAKER	2
3	RECEPTION HALL 153		NEquipment	720	20 1	B	20 1	500	NEquipment		REFRIGERATOR	4
5	RECEPTION HALL 153		NEquipment	540	20 1	C	20 1	1500	NEquipment		MICROWAVE	6
7	DRAPERY MOTOR 138		NEquipment	500	20 1	A	20 1	500	NEquipment		MOTORIZED DOOR 148	8
9	MOTORIZED DOOR 101		NEquipment	500	20 1	B	20 1	500	NEquipment		MOTORIZED DOOR 147	10
11	MOTORIZED DOOR 101		NEquipment	500	20 1	C	20 1	500	NEquipment		VENDING MACH. 149	12
13	INSTAHOT		NEquipment	1000	20 1	A	20 1	500	NEquipment		VENDING MACH. 149	14
15	GARBAGE DIS.		NEquipment	1000	20 1	B	20 1	500	NEquipment		VENDING MACH. 149	16
17	COFFEE MACH.		NEquipment	1000	20 1	C	20 1	500	NEquipment		VENDING MACH. 149	18
19	KITCHEN MISC.		NEquipment	500	20 1	A	40 2	3000	NEquipment		HOT FOOD HOLDING	20
21	REFRIGERATOR		NEquipment	500	20 1	B	''	3000			''	22
23	KITCHEN MISC.		NEquipment	500	20 1	C	20 1	600	NEquipment		SECURITY GATE	24
25	SPARE		SPARE	0	20 1	A	20 1	500	NEquipment		GARBAGE DISPOSAL	26
27	SPARE		SPARE	0	20 1	B	20 1	0	SPARE		SPARE	28
29	SPARE		SPARE	0	20 1	C	20 1	0	SPARE		SPARE	30
31						A						32
33						B						34
35						C						36
37						A						38
39						B						40
41						C						42

ALL CONNECTED	KVA	AMPS	* PHASE TOTALS	VA	AMPS	BUS TOTALS	KVA
TOTAL CONNECTED	20.36	56.5	* A-N	7697.4	64.1	CONNECTED	25.32
TOTAL DEMAND	20.36	56.5	* B-N	7424.9	61.8	DEMAND	25.32
TOTAL DESIGN	20.36	56.5	* C-N	5640.4	47.0	DESIGN	25.68

FEED THRU LUGS

PANEL: 1N2C   OC DEVICE TYPE: Breaker   ENCLOSURE: NEMA 1   MAINS(A): 225A MLO   BUS RATING(A): 225
LOCATION: ELECTRICAL ROOM 132   DEVICE FAMILY: Bolt On   MOUNTING: Surface   WIRING: 3-Phase 4-Wire   WITHSTAND(A): 10000
FED FROM: PANEL SDP-N   VOLTAGE: 208/120   FAULT CURRENT(A) 5102

CKT	DESCRIPTION	NOTES	DEMAND CODE	VA	OC AMPS P	PHASE	OC AMPS P	VA	DEMAND CODE	NOTES	DESCRIPTION	CKT
1	BOOKSTORE TRACK		NLighting	1575	20 1	A	20 1	1575	NLighting		BOOKSTORE TRACK	2
3	BOOKSTORE TRACK		NLighting	1575	20 1	B	20 1	1575	NLighting		BOOKSTORE TRACK	4
5	BOOKSTORE TRACK		NLighting	1575	20 1	C	20 1	1575	NLighting		BOOKSTORE TRACK	6
7	BOOKSTORE TRACK		NLighting	1575	20 1	A	20 1	1575	NLighting		BOOKSTORE TRACK	8
9	DISPLAY LTG.		NLighting	1000	20 1	B	20 1	0	SPARE		SPARE	10
11	SPARE		SPARE	0	20 1	C	20 1	0	SPARE		SPARE	12
13	SP-1		Elevators	1180	20 1	A						14
15	SPARE		SPARE	0	20 1	B						16
17	SPARE		SPARE	0	20 1	C						18
19						A						20
21						B						22
23						C						24
25						A						26
27						B						28
29						C						30
31						A						32
33						B						34
35						C						36
37						A						38
39						B						40
41						C						42

ALL CONNECTED	KVA	AMPS	* PHASE TOTALS	VA	AMPS	BUS TOTALS	KVA
TOTAL CONNECTED	14.72	40.9	* A-N	7427.5	61.8	CONNECTED	14.72
TOTAL DEMAND	14.72	40.9	* B-N	4150.0	34.6	DEMAND	14.72
TOTAL DESIGN	18.12	50.3	* C-N	3150.0	26.2	DESIGN	18.12

FEED THRU LUGS

PANEL: 2N2A   OC DEVICE TYPE: Breaker   ENCLOSURE: NEMA 1   MAINS(A): 225A MLO   BUS RATING(A): 225
LOCATION: MECHANICAL ROOM 234   DEVICE FAMILY: Bolt On   MOUNTING: Surface   WIRING: 3-Phase 4-Wire   WITHSTAND(A): 10000
FED FROM: PANEL 1N2A   VOLTAGE: 208/120   FAULT CURRENT(A) 3949

CKT	DESCRIPTION	NOTES	DEMAND CODE	VA	OC AMPS P	PHASE	OC AMPS P	VA	DEMAND CODE	NOTES	DESCRIPTION	CKT
1	HWP-7		HVAC Systems	420	20 1	A	20 3	793	HVAC Systems		EF-1	2
3	HWP-8		HVAC Systems	420	20 1	B	''	793			''	4
5	PROJECTOR 235		NEquipment	500	20 1	C	''	793			''	6
7	RM 208, 209		NReceptacles	720	20 1	A	20 1	1620	NReceptacles		RM 150 FLOOR BOX	8
9	RM 206, 207, 208		NReceptacles	720	20 1	B	20 1	1620	NReceptacles		PERIODICAL FLOOR BOX	10
11	RM 204, 205, 206		NReceptacles	720	20 1	C	20 1	1620	NReceptacles		PERIODICAL FLOOR BOX	12
13	RM 202		NReceptacles	720	20 1	A	20 1	720	NReceptacles		RM 234, 235	14
15	RM 203, 204		NReceptacles	900	20 1	B	20 1	720	NReceptacles		READ. RM 201, RM 231	16
17	READING RM 201		NReceptacles	720	20 1	C	20 1	900	NReceptacles		RM 232, 233, 234	18
19	RM 235		NReceptacles	360	20 1	A	20 1	0	SPARE		SPARE	20
21	RM 235		NReceptacles	360	20 1	B	20 1	540	NReceptacles		READING RM 201	22
23	RM 235		NReceptacles	360	20 1	C	20 1	360	NReceptacles		READING RM 201	24
25	AHU-2		NReceptacles	360	20 1	A	20 1	1260	NReceptacles		READING RM 201	26
27	AHU-3		NReceptacles	360	20 1	B	20 1	1650	NReceptacles		READING RM 201	28
29	FLOOR BOX CONTROL		NEquipment	100	20 1	C	20 1	1650	NReceptacles		READING RM 201	30
31	READING RM 201		NReceptacles	1260	20 1	A	20 1	1650	NReceptacles		READING RM 201	32
33	READING RM 201		NReceptacles	1620	20 1	B	20 1	1650	NReceptacles		READING RM 201	34
35	READING RM 201		NReceptacles	1620	20 1	C	20 1	1080	NReceptacles		READING RM 201	36
37	SPARE		SPARE	0	20 1	A	20 1	0	SPARE		SPARE	38
39	SPARE		SPARE	0	20 1	B	20 1	0	SPARE		SPARE	40
41	SPARE		SPARE	0	20 1	C	20 1	0	SPARE		SPARE	42

ALL CONNECTED	KVA	AMPS	* PHASE TOTALS	VA	AMPS	BUS TOTALS	KVA
TOTAL CONNECTED	31.65	87.8	* A-N	9879.1	82.3	CONNECTED	31.65
TOTAL DEMAND	22.73	63.1	* B-N	11349.1	94.5	DEMAND	22.73
TOTAL DESIGN	22.73	63.1	* C-N	10418.6	86.8	DESIGN	22.73

PANEL: 2N2B   OC DEVICE TYPE: Breaker   ENCLOSURE: NEMA 1   MAINS(A): 225A MLO   BUS RATING(A): 225
LOCATION: MECHANICAL ROOM 234   DEVICE FAMILY: Bolt On   MOUNTING: Surface   WIRING: 3-Phase 4-Wire   WITHSTAND(A): 10000
FED FROM: PANEL 1N2B   VOLTAGE: 208/120   FAULT CURRENT(A) 3949

CKT	DESCRIPTION	NOTES	DEMAND CODE	VA	OC AMPS P	PHASE	OC AMPS P	VA	DEMAND CODE	NOTES	DESCRIPTION	CKT
1	AHU-2 LTG		NLighting	750	20 1	A	20 1	600	NEquipment		SECURITY GATE	2
3	AHU-3 LTG		NLighting	750	20 1	B	20 1	0	SPARE		SPARE	4
5	SPARE		SPARE	0	20 1	C	20 1	0	SPARE		SPARE	6
7	MOTORIZED DR RM 231		NEquipment	500	20 1	A	20 1	360	NReceptacles		IT ROOM 237	8
9	MOTORIZED DR RM 233		NEquipment	500	20 1	B	20 1	720	NReceptacles		IT ROOM 237	10
11	MOTORIZED DR RM 201		NEquipment	500	20 1	C	20 1	360	NReceptacles		IT ROOM 237	12
13	SPARE		SPARE	0	20 1	A						14
15	SPARE		SPARE	0	20 1	B						16
17	SPARE		SPARE	0	20 1	C						18
19						A						20
21						B						22
23						C						24
25						A						26
27						B						28
29						C						30
31						A						32
33						B						34
35						C						36
37						A						38
39						B						40
41						C						42

ALL CONNECTED	KVA	AMPS	* PHASE TOTALS	VA	AMPS	BUS TOTALS	KVA
TOTAL CONNECTED	4.99	13.9	* A-N	2186.5	18.2	CONNECTED	4.99
TOTAL DEMAND	4.99	13.9	* B-N	1951.5	16.3	DEMAND	4.99
TOTAL DESIGN	5.36	14.9	* C-N	859.2	7.2	DESIGN	5.36

PANEL: 1S2D   OC DEVICE TYPE: Breaker   ENCLOSURE: NEMA 1   MAINS(A): 225A MLO   BUS RATING(A): 225
LOCATION: DISTANCE LEARNING   DEVICE FAMILY: Bolt On   MOUNTING: Surface   WIRING: 3-Phase 4-Wire   WITHSTAND(A): 10000
FED FROM: PANEL SDP-S   VOLTAGE: 208/120   FAULT CURRENT(A) 5761

CKT	DESCRIPTION	NOTES	DEMAND CODE	VA	OC AMPS P	PHASE	OC AMPS P	VA	DEMAND CODE	NOTES	DESCRIPTION	CKT
1	DISTANCE LEARNING		NReceptacles	500	20 1	A	20 1	500	NReceptacles		DISTANCE LEARNING	2
3	DISTANCE LEARNING		NReceptacles	500	20 1	B	20 1	500	NReceptacles		DISTANCE LEARNING	4
5	DISTANCE LEARNING		NReceptacles	500	20 1	C	20 1	500	NReceptacles		DISTANCE LEARNING	6
7	DISTANCE LEARNING		NReceptacles	500	20 1	A	20 1	500	NReceptacles		DISTANCE LEARNING	8
9	DISTANCE LEARNING		NReceptacles	500	20 1	B	20 1	500	NReceptacles		DISTANCE LEARNING	10
11	DISTANCE LEARNING		NReceptacles	500	20 1	C	20 1	500	NReceptacles		DISTANCE LEARNING	12
13	DISTANCE LEARNING		NReceptacles	1000	20 1	A	20 1	500	NReceptacles		DISTANCE LEARNING	14
15	DISTANCE LEARNING		NReceptacles	1000	20 1	B	20 1	500	NReceptacles		DISTANCE LEARNING	16
17	DISTANCE LEARNING		NReceptacles	1000	20 1	C	20 1	1440	NReceptacles		DISTANCE LEARNING	18
19	DISTANCE LEARNING		NReceptacles	1000	20 1	A	20 1	360	NReceptacles		DISTANCE LEARNING	20
21	DISTANCE LEARNING		NReceptacles	1000	20 1	B	20 1	500	NReceptacles		DISTANCE LEARNING	22
23	DISTANCE LEARNING		NReceptacles	1000	20 1	C	20 1	500	NReceptacles		DISTANCE LEARNING	24
25	DISTANCE LEARNING		NReceptacles	500	20 1	A	20 1	500	NReceptacles		DISTANCE LEARNING	26
27	DISTANCE LEARNING		NReceptacles	500	20 1	B	20 1	500	NReceptacles		DISTANCE LEARNING	28
29	DISTANCE LEARNING		NReceptacles	500	20 1	C	20 1	500	NReceptacles		DISTANCE LEARNING	30
31	DISTANCE LEARNING		NReceptacles	500	20 1	A	20 1	500	NReceptacles		DISTANCE LEARNING	32
33	DISTANCE LEARNING		NReceptacles	500	20 1	B	20 1	500	NReceptacles		DISTANCE LEARNING	34
35	DISTANCE LEARNING		NReceptacles	500	20 1	C	20 1	0	SPARE		SPARE	36
37	DISTANCE LEARNING		NReceptacles	500	20 1	A	20 1	0	SPARE		SPARE	38
39	DISTANCE LEARNING		NReceptacles	500	20 1	B	20 1	0	SPARE		SPARE	40
41	DISTANCE LEARNING		NReceptacles	720	20 1	C	20 1	0	SPARE		SPARE	42

ALL CONNECTED	KVA	AMPS	* PHASE TOTALS	VA	AMPS	BUS TOTALS	KVA
TOTAL CONNECTED	23.02	63.9	* A-N	7360.0	61.3	CONNECTED	23.02
TOTAL DEMAND	16.51	45.8	* B-N	7500.0	62.5	DEMAND	16.51
TOTAL DESIGN	16.51	45.8	* C-N	8160.0	67.9	DESIGN	16.51

FEED THRU LUGS

PANEL SCHEDULES
ELECTRICAL

PCC ROCK CREEK CAMPUS
NEW BUILDING

PORTLAND COMMUNITY COLLEGE
ROCK CREEK CAMPUS
17705 NW Springville Road
PORTLAND, OREGON 97229

THOMAS HACKER ARCHITECTS INC
733 SW OAK STREET
PORTLAND, OREGON 97205
(503) 227-1254

PAE CONSULTING ENGINEERS
808 SW THIRD AVENUE
PORTLAND, OREGON 97204
(503) 226-2921

REGISTERED PROFESSIONAL ENGINEER
44775
Grant Parthemer
OREGON
July 13, 1999
GRANT R. PARTHEMER
3-19-03

EXPIRES 12-31-04

REVISIONS : 1 03/21/03

DRAWN BY : WBD
JOB NO. : 0115

DATE : 02/14/03
SCALE : NONE

DWG. NO. E5.05

THOMAS HACKER
ARCHITECTS INC.